SCHALTBAU
Connect Contact Control

1

Connectors

B Series

Connectors for rail vehicles

Installation and Maintenance Instructions

Manual F160.en

Content

1. Important Basic Information

1.1 Legal Notes

Without prior written consent of Schaltbau GmbH, the instructions is not allowed to be electronically or mechanically reproduced – as a whole or in parts – be distributed, changed, transmitted, translated into another language or used in any other way.
Schaltbau GmbH cannot be held liable for damage caused by not observing (or only partly observing) the Installation and installation instructions.

1.2 Conventions for this Installation and Maintenance Instructions

This instructions describe the installation and maintenance of the connectors.
Cross references are presented in ***bold italics***.
To highlight particularly important safety instructions and other information, the following symbols are used in this instructions:

⚠ DANGER

Indicates a hazardous situation with a high level of risk which, if not avoided, will result in death or serious injury.

⚠ WARNING

Indicates a hazardous situation with a medium level of risk which, if not avoided, could result in death or serious injury.

⚠ CAUTION

Indicates a hazardous situation with a low level of risk which, if not avoided, may result in minor or moderate injury.

NOTICE

Indicates a hazardous situation which, if not avoided, may result in property damage, such as service interruption or damage to equipment or other materials.

ℹ	Refers to technical features and methods aimed at facilitating work or to particularly important information.

2. General and Security Information

The connectors dealt with in this document are intended for use with low-voltage systems for special installations. They are designed and tested in compliance with the generally recognised state of the art. However, improper use, operation, handling, maintenance of or tampering with electric equipment can cause serious or fatal injury to the user or others, and the appliance or other property can be damaged.
The operation, maintenance and installation instructions for the connectors must therefore be strictly followed.
Any uncertainties must be clarified and all queries must include details of the type of device and the serial number.
Only authorized and trained personnel are allowed to plan and carry out all mechanical and electrical installations, transport, commissioning, as well as maintenance and repair work. This applies to the observation of the general installation and safety regulations for low-voltage systems as well as the proper use of tools approved for this purpose.
Electrical devices are to be protected, as much as possible, from dust and moisture during installation, operation or storage.

2.1 Observing the Instructions

- All staff must read and understand the instructions and adhere to them when working with the device.
- **Always carefully observe all safety warnings!**

2.2 User Obligations

- Observe the respective national instructions and other applicable safety regulations for the use and cable assembly of connectors and connector systems.
- Observe all applicable national provisions, all safety, accident prevention and environmental regulations as well as the recognized technical rules for safe and proper working.
- Carry out regular inspections of all protection and safety devices to see if they work properly.
- Work on electric equipment may only be performed by a qualified electrician or trained personnel working under the direction and supervision of a qualified electrician according to the applicable rules of electrical engineering.

- A qualified electrician is a person who can judge and recognise the possible dangers of the jobs commended to him based on his training, knowledge and experience and by knowledge of the appropriate regulations.
- Staff must be informed clearly about who is responsible for the maintenance of the connectors.

2.3 Intended Use

- The connectors are intended for plug-in and detachable connections of components, devices and systems only. They are used for the transmission of power and signals.
- In order to comply with DIN EN IEC 61984 make sure that always the live side of the connector is fitted with socket contacts.
- Crimp connections have to be manufactured according to DIN EN IEC 60352-2 – Solderless Connections.
- Make sure that there are no undue tensile, pressure, flexing and torsion loads on the connection cable.
- None of the operating conditions defined in our catalogue ***F160.en*** in section ***"Specifications"***, such as voltages, currents, ambient conditions, etc. may be changed.
- Work on the connectors must only be carried out by staff who meets the requirements set out in these instructions.
- According to DIN EN IEC 61984 connectors used as intended must not be engaged or disengaged when live or under load.
- The connectors must not be contaminated with aggressive media.
- A connector that does not engage easily requires special attention:
  Check for the correct orientation, pollution or if contacts got bent. Remedy the cause without delay. Never use force! The connector should always engage easily.
- Improper handling of the connectors, e. g. when hitting the floor with some impact, can result in breakage, cracks and deformation. Do not throw the plug with cable to the floor!
- In order to meet the requirements of the protection class and to protect the connectors against the entry of dirt or moisture, make sure that when not mated, the hinged lid of receptacles is always closed according to its intended use.
- In not mated condition, double ended connector cables have to be stored/kept properly in the driver's cab of the vehicle.
- Make sure that when not mated, the plug of single ended cables is always inserted into a dummy receptacle.
- When disengaging a connector, pull the plug and never the cable.
- Do not disengage the connectors with a hammer or other auxiliary tools.
- Always close the lid of the receptacle by hand, don't let it slam.
- Use the connector only according to its intended use. Replace or repair damaged parts exclusively with original parts. Any other usage of or tampering with the connector is considered contrary to its intended use. No liability is assumed for damages and accidents caused due to non-compliance with the instructions or improper use of the connector.

2.4 Ambient Conditions

NOTICE

The connectors are constructed for specific ambient conditions.

- Operate the connectors only under the ambient conditions, like temperature ranges and IP protection classes as defined in our ***catalogue F160.en*** in section "***Specifications***".
  schaltbau.info/download1en

Note:
In case of a very low or very high ambient temperature which approximates the limits of the allowable operating temperature range specified in our ***catalogue F160.en*** in section "***Specifications***",

- a higher effort may be needed for the plugging and unplugging and
- the operational life span of plug and coupling receptacle may thus be reduced due to increased wear and tear.

3. Dangers and Security Measures

3.1 Electrical Dangers

DANGER

The connectors contain components that carry voltage. Risk of electric shock!
Always observe the following safety regulations before beginning any work on electrical constructions:

- Disconnect
- Ensure that it is not possible to reconnect unintentionally
- Clearly mark your work area
- Make sure that there is no voltage present
- Earth and short circuit the installation
- Besides the main electric circuit, also disconnect additional and auxiliary circuits
- Insulate or cover adjacent energized parts
- Only an electrically skilled person may determine if there is no voltage present

WARNING

Dirt, moisture, snow and ice in the interior of coupling receptacles or dummy receptacles contaminate the plug. The coupling of a contaminated plug to the coupling receptacle may lead to a life-threatening electric shock!

- Always check if the interior of the receptacles is free from dirt, moisture, snow and ice before inserting a plug into a coupling receptacle or a dummy receptacle.
- Do not insert a plug into a receptacle when the latter is contaminated, moist or contaminated with snow and ice.
- Remove dirt, moisture, snow and ice without residues from the interior of a coupling receptacle or a dummy receptacle and from the plug.
- Never couple a contaminated plug to the coupling receptacle.

3.2 Other Dangers

WARNING

Exclusively use the connectors for purposes as indicated in the specications and data sheets.
A wrong application can cause accidents and severe damages to persons.

- The manufacturer doesn't take the responsibility for accidents which were caused by improper use of the product.

WARNING

The plugging and disconnecting of the connectors on-load can cause electric arcs. When explosive substances or ignition sources of any kind are nearby, there is a risk of fire and explosion!

- Never plug and disconnect the connectors on-load.

⚠ CAUTION

The connectors may grow warm during operation and they may become hot depending on the ambient temperature and the conditions of use. Risk of burn to the hands!

- Wear protective gloves when plugging and disconnecting the connectors in the case of a high ambient temperature.

3.3 Mechanical Dangers

⚠ CAUTION

The connectors contain components that are subject to mechanical tension. Risk of crushing!

- Use appropriate tools for installation and maintenance works on the connectors.
- Ensure that components, which are subject to mechanical tension, are secured before installing or dismantling these components.

⚠ CAUTION

The connectors contain sharp-edged parts. Risk of injury!

- Use appropriate tools for installation and maintenance works on the connectors.
- Wear protective gloves when working with sharp-edged components.

3.4 Measures for Avoiding Damages

NOTICE

Aggressive fluids may damage the connectors.

- Make sure that the connectors are not exposed to aggressive fluids.

NOTICE

Improper handling of the connectors, e.g. when hitting the floor with some impact, can result in breakage, cracks and deformation.

- Make sure that the connectors are always used properly.
- Do not throw the plug with cable to the floor.
- Regularly sight-check the connectors for potential damages.
- Immediately replace damaged components.

3.5 Measures for Avoiding Malfunctions

NOTICE

In the case of damage, wear and tear and/or soiling of the connector components - in the form of a partial break, sharp edges and discoloured surfaces - the functional safety of the connectors is no longer guaranteed.

- Carry out regular visual checks to detect wear and tear and dirt.
- Immediately replace damaged parts.
- Immediately remove dirt without leaving any residues.
- Immediately replace parts with stubborn dirt.

NOTICE

Inappropriate handling when plugging or disconnecting may damage the connectors. The functional safety of the connectors is no longer guaranteed when parts are damaged.

- Take care that plug and receptacle do not tilt and that they are plugged without exceeding force.
- Make sure before the plugging procedure that plug and receptacle as well as the hinged lid of the receptacle are not contaminated. Remove any existing dirt.
- Make sure that when not mated,
  - the plug of single ended cables is always inserted into a dummy receptacle,
  - double ended connector cables are always stored/kept properly in the driver's cab of the vehicle,
  - the hinged lid of receptacles is closed according to its intended use.

4. Description

4.1 Scope

The connectors, series B, have been designed especially for the demanding railcar environment. They are superbly suited for power and control circuits on road and rail vehicles alike.
The power connectors can be used in applications up to 400 V respectively. By adding control contacts, protection circuits may be realised such as the interlocking circuit shown in the diagram below.

Features

- Rugged design
- Universally usable connectors for power and control circuits
- Easy replacement of components
- Easy assembly resulting in short assembly times
- Mechanically locking connector

Cable Assembly

- Connector cables (single and double ended) are available in standard lengths and various types or can be made to customer specifications upon request.

Technical Information and Material Specification

- For technical information and material specifications, see our catalogue ***F160.en***.
  Download at: *schaltbau.info/download1en*

4.2 Application

The diagram below shows an example of an interlocking circuit to protect personnel from contact with high voltages.

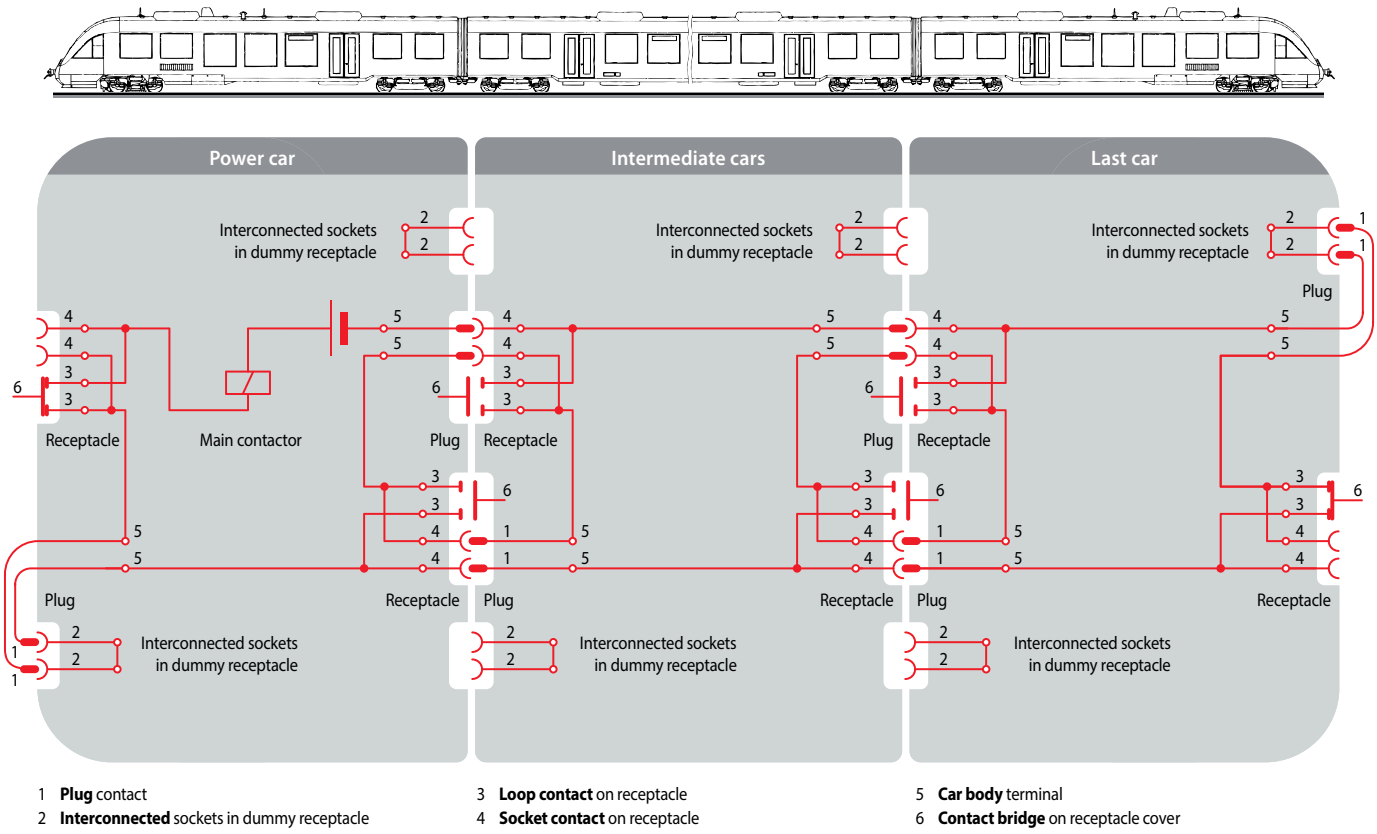

Fig. 1: Diagram of an interlocking circuit to protect personnel from contact with high voltages realised with connector components of the B series

Intended use:

The main contactor will apply voltage to the power circuit only when all covers are closed and all plugs have been inserted into their respective operating or dummy receptacles. At disengagement of a connector the control contacts (Pos. 1 and 4) interrupt the control circuit before the power contacts disconnect. Thus the main contactor interrupts power before the power contacts actually break their circuit.

Components comprising the safety loop:

- 2 plugs B ST with insert and 2 additional control contacts (e.g. pin insert B E-3P+PE+2 /M /150)
- 2 receptacles B Dx with contact bridge on cover, equipped with additional loop and control contacts (e.g. socket insert B E-3S+PE+4 /M /150)
- 2 dummy receptacles B BD with contact insert B E-2P/P with both control contacts (Pos. 2) bridged

4.3 Survey of the Components and Combination Possibilities

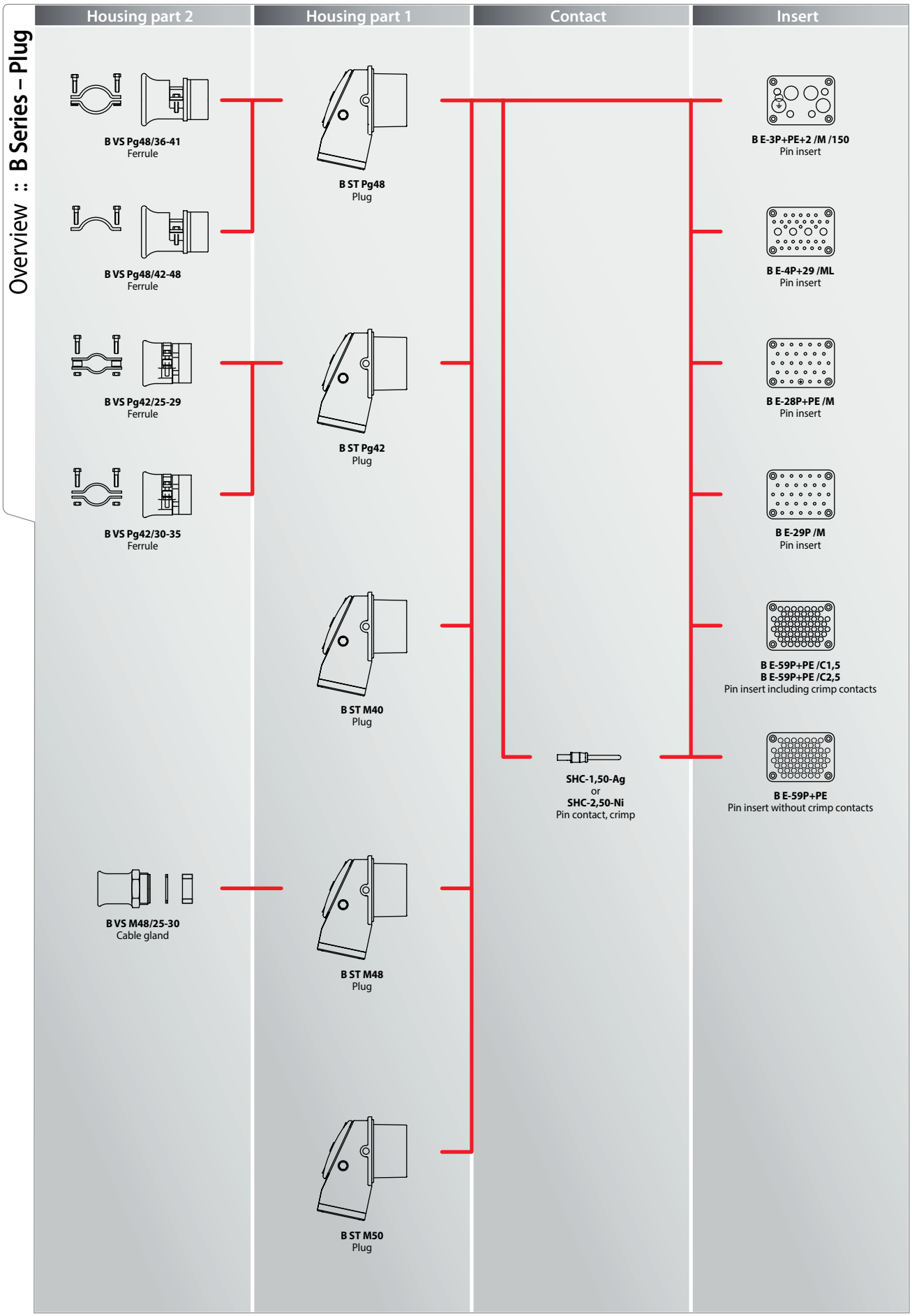

SCHALTBAU
Connect Contact Control

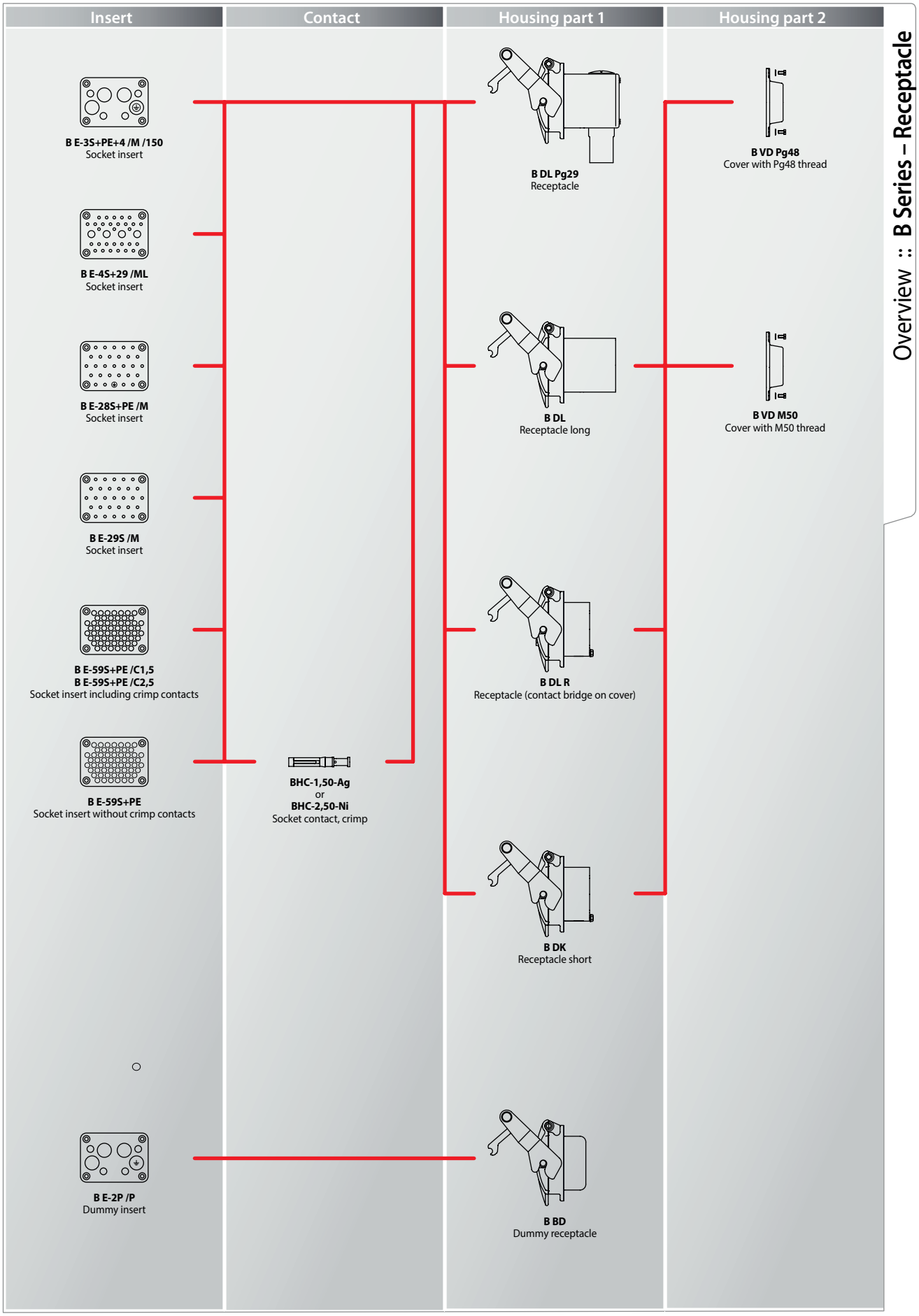

Overview :: B Series – Receptacle

5. Installation

DANGER

The connectors contain components that carry voltage. Risk of electric shock!
Always observe the following safety regulations before beginning any work on electrical constructions:

- Disconnect
- Ensure that it is not possible to reconnect unintentionally
- Clearly mark your work area
- Make sure that there is no voltage present
- Earth and short circuit the installation
- Besides the main electric circuit, also disconnect additional and auxiliary circuits
- Insulate or cover adjacent energized parts
- Only an electrically skilled person may determine if there is no voltage present

NOTICE

During installation, ensure that dirt caused by surrounding construction activities does not get into the connectors.

5.1 Check Parts for Transport Damage

NOTICE

If parts are damaged, the functional reliability of the connectors is no longer given.

- Before installing, check all parts for any possible transport damage.
- Do not install any damaged parts.

5.2 Dimensions/Interfaces to the Vehicle and Technical Parameters

The dimensions to the interfaces of the vehicle and further technical specifications are given in the respective data sheets or in our catalogue ***F160.en.***
Download: *schaltbau.info/download1en*

5.3 Coupling Receptacles

Preliminaries

- The installation has to be carried out by qualified trained personnel.
- An appropriate mounting frame with cut-out according to the dimensions diagram below (***Fig. 2)*** has to be provided for the fastening of the coupling receptacle.
- The coupling receptacle is fixed to the mounting frame with 4 hexagon screws M6 incl. nuts.
  - The length of the fixing screws has to be determined by the manufacturer of the vehicle according to the constructional conditions.
  - In order to secure the screws against self-loosening, appropriate screw locking devices have to be provided.
  - The tightening torque for the fixing screws is 3 Nm.

Mounting template

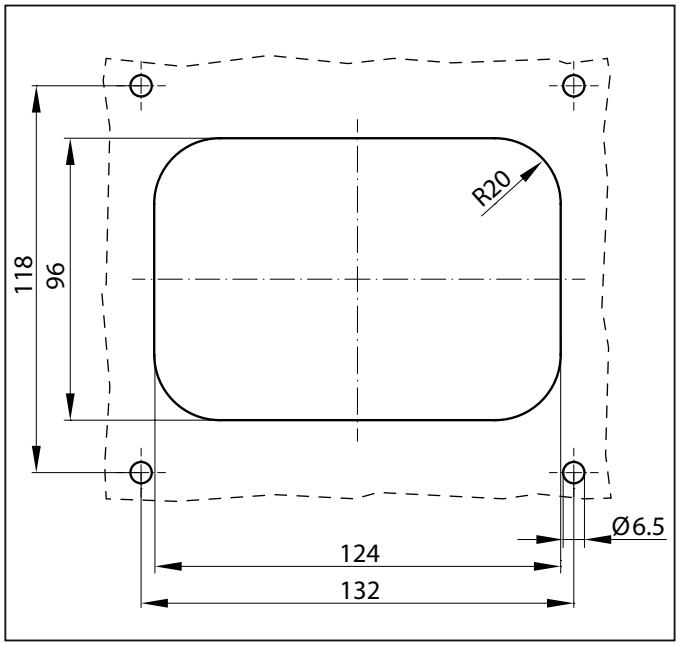

Fig. 2: Dimensions and arrangement of the mounting cut-out and mounting holes (valid for all receptacles in the B series)

Correct Mounting Position

The coupling receptacle is screwed with the vertically aligned fastening flange to the vertically aligned mounting frame. ***Fig. 3/A*** shows an example of a correct mounting position.
Moreover, a mounting position up to an angle of max. 20° clockwise is possible for coupling receptacles. In this instance, the lid must show downward (for examples refer to ***Fig. 3/A and B***).

NOTICE

An installation of the coupling receptacle with lid showing upward (refer to ***Fig. 3/C***) is not permissible! When the lid is open in this mounting position, contamination and moisture might penetrate the contacts and accumulate there during the plugging procedure or in the plugged condition. Moreover, this mounting position causes a not definable limitation of the prescribed tensile forces/directions on the flexible cable and thus on the contact retainer and locking mechanism.

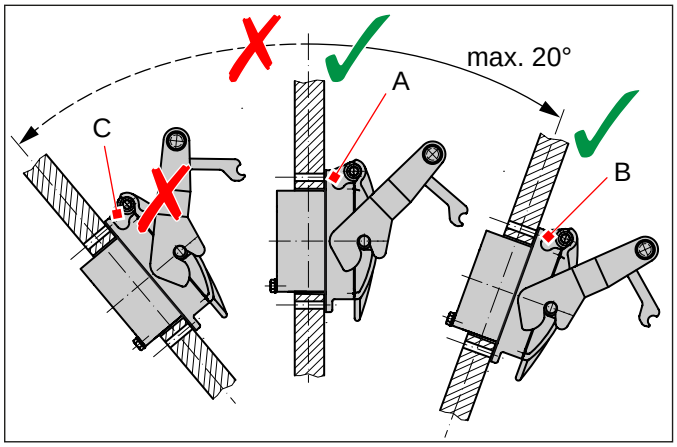

Fig. 3: Example for intended mounting positions (A, B) and not permissible mounting positions (C) of receptacles

Installation Example Receptacles

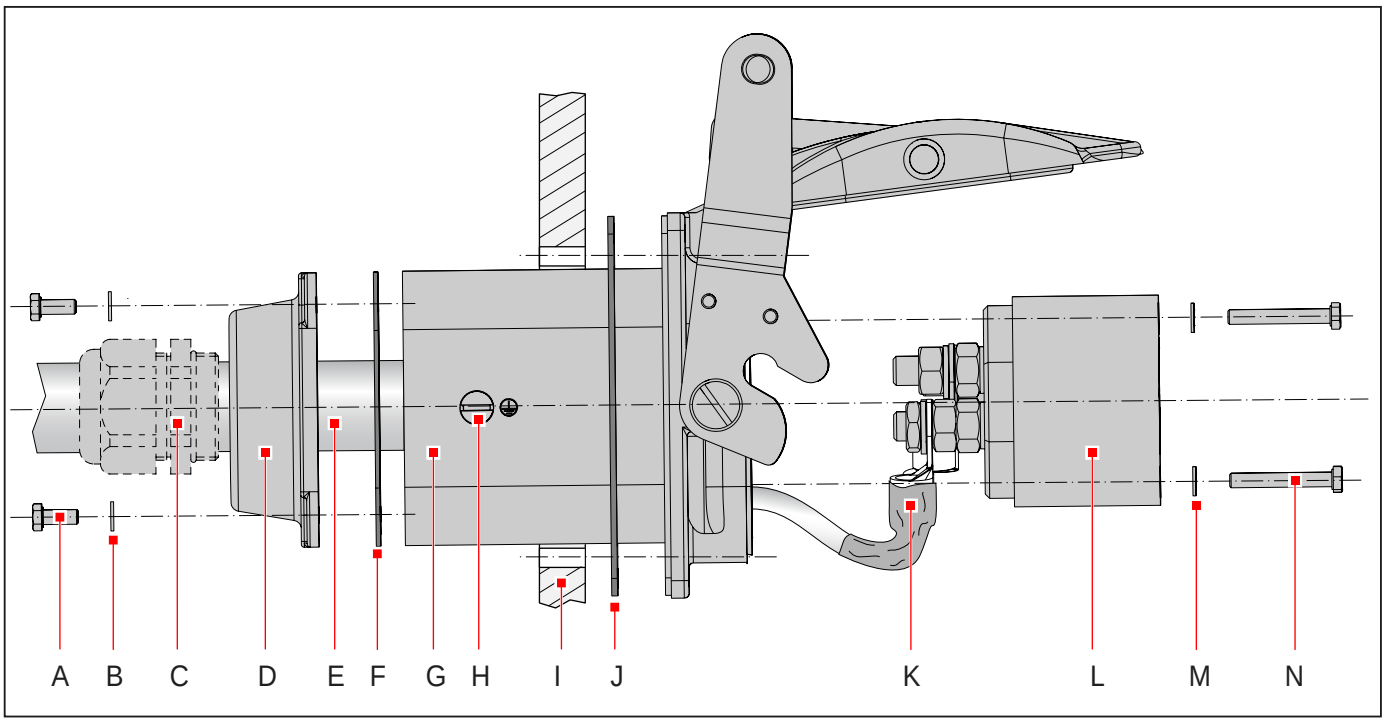

Fig. 4: Installation example for receptacles

A Fixing screws M5 (4x) for cover (housing part 2)
B Washers
C Cable gland/strain relief (PG48 or M50, not included in delivery)
D Cover (housing part 2)
- B VD Pg48 Cover with Pg48 thread
- or B VD M50 Cover with M50 thread
E Single ended connector cable, pre-assembled
F Seal for cover (housing part 2)
G Receptacle (housing part 1)
H PE-Terminal for connection of receptacle shell (G) with socket insert (L) (terminal is located inside the receptacle shell)
I Mounting frame with prepared cut-out and mounting holes
J Flat rubber seal for receptacle (housing part 1)
K Cable lug, Note: Slide shrink fitting tubings over all lugs!
L Contact insert (socket contacts)
M Waschers
N Fixing screws M5 (4x) for contact insert

- Make sure that the flat rubber seal (J) is placed on the flange of the receptacle (G).
- Insert the open end of the connector cable (E) with pre-assembled socket insert (L) from the front into the receptacle and lead out the open end of the cable at the rear side of the receptacle.
- Thread the seal (F) and cover (D) on the open end of the connector cable.
- Thread the cable gland/strain relief (C) (PG48 or M50, not included in delivery) on the open end of the connector cable.
- Insert the pre-assembled contact insert (L) into the receptacle shell (G). In doing so, gradually pull out the connector cable at the rear side of the receptacle.
- Connect the PE-Terminal of the contact insert (L) with the PE-Terminal (H) located inside the receptacle shell (H).
- Check the cable routing inside the receptacle shell. Make sure that no cables are squashed, bent or damaged in any way.
- Thighten the contact insert (L) in the receptacle shell using the 4 screws M5 (N) and 4 washers (M). Tightening torque: 2.8 Nm
- Insert the seal (F) into the cover (D) and position the cover (D) on the receptacle shell (G).
- Screw on the cover (D) on the receptacle shell using the 4 screws M5 (A) and 4 washers (B) .
- Check again that the seal (F) is properly in place and tighten the cover with a tightening torque of 2.8 Nm.

NOTICE

To ensure the proper operation, the contact insert and the contacts may not be under tensile, compressive, bending and torsion loads.

- Make sure that the specified bending radius for the respective cable diameter is observed when laying the cables.

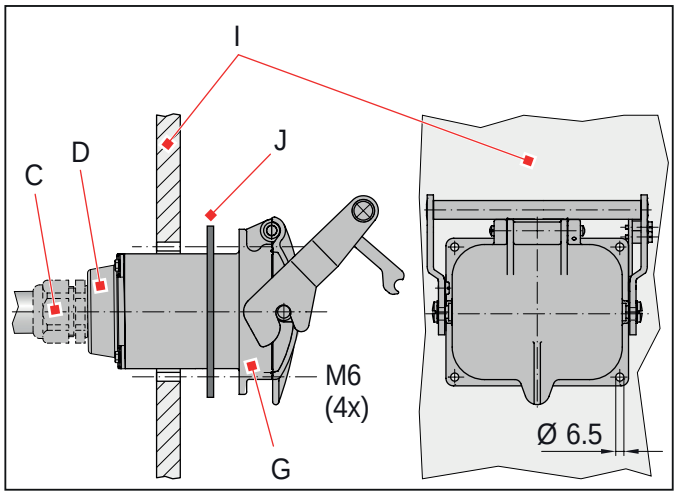

Fig. 5: Installation of the coupling receptacle to the mounting frame

- Screw the cable gland/strain relief (C) (PG48 or M50, not included in delivery) into the thread of the cover (D) and install the strain relief.
- Position the flat rubber seal (J) to the flange of the receptacle (G).
- Insert the receptacle (G) into the cut-out at the prepared mounting frame (I).
- Screw on the receptacle (G) at the prepared mounting frame (I) slightly, using 4 hexagon screws M6 incl. nuts and appropriate screw locking devices (***Fig. 5***).
- Check that the flat rubber seal (J) is properly in place.
- Tighten the 4 hexagon screws M6 with a tightening torque of 3 Nm.

Installation Example Receptacles with Contact Bridge on Cover

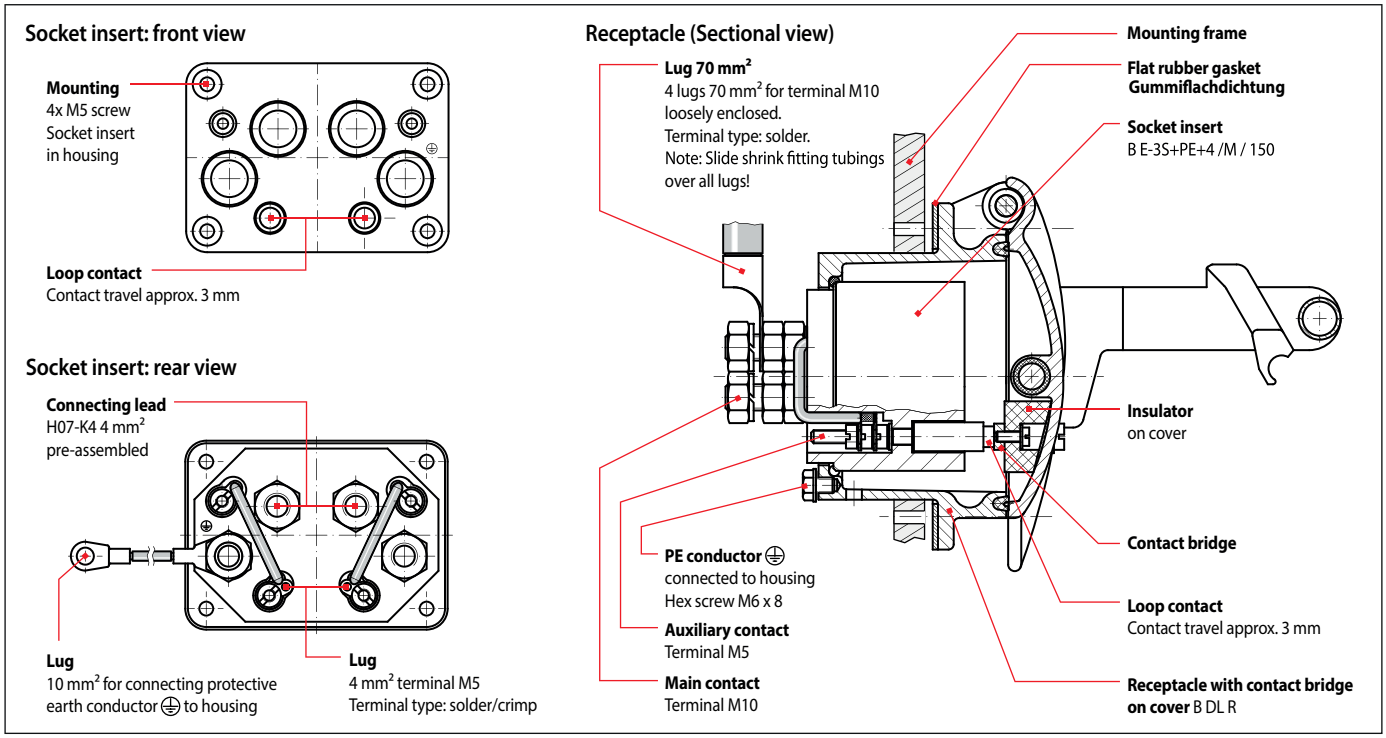

Fig. 6: Installation example for receptacles with contact bridge on cover (receptacle BD L R with contact insert B E-3S+PE+4 / M / 150)

Check

- Check that all of the installed parts are in the correct position and function properly.
- Make sure that there are no undue tensile, pressure, flexing and torsion loads on the connection cables.
- Check the functionality of the receptacle lid.

For coupling receptacles equipped with auxiliary contact:

- Check the functional capability of the auxiliary contact.

Commissioning

⚠ DANGER

In the case of a contact of the traction current line with the vehicle, the coupling receptacle may be highly energized. Deadly hazard!

- Before commissioning the coupling receptacle, a high voltage test must be carried out.

- Before commissioning the coupling receptacle, it must be tested in accordance with EN 50215.

5.4 Dummy receptacles

Installation

Dummy receptacles are installed in the same way as coupling receptacles. However, the dummy receptacle uses an unpopulated dummy insert without cable instead of the assembled socket insert with connector cable.

- Install the dummy receptacle as described under ***„5.3 Coupling Receptacles“***.
- The requirements regarding correct mounting position for dummy receptacles are the same as for coupling receptacles, see ***„5.3 Coupling Receptacles“***.

For dummy receptacles with contact bridge on the cover there are special dummy inserts available:
- B E-2+PE+2+2/M
- B E-2P/P

For more details regarding this refer to our catalogue ***F160.en***.

Download under: ***schaltbau.info/download1en***

Check

- Check that all of the installed parts are in the correct position and function properly.
- Check the functionality of the receptacle lid.

Commissioning

⚠ DANGER

In the case of a contact of the traction current line with the vehicle, the dummy receptacle may be highly energized. Deadly hazard!

- Before commissioning the dummy receptacle, a high voltage test must be carried out.

- Before commissioning the dummy receptacle, it must be tested in accordance with EN 50215.

5.5 Single Ended Cables with Plug

Single ended cables with plug have to be installed in such a way, that they are free of undue tensile, compressive, bending and torsion loads.

Preliminaries

- The installation has to be carried out by qualified trained personnel.
- A mounting hole in the car body and an appropriate cable gland has to be provided for the installation of single ended cables with plug.

NOTICE

To ensure the proper operation, the contact insert and the contacts may not be under tensile, compressive, bending and torsion loads.

- Make sure that the specified bending radius for the respective cable diameter is observed when laying the cables.

Check

- Check that all of the installed parts are in the correct position and function properly.

Commissioning

⚠ DANGER

In the case of a contact of the traction current line with the vehicle, the single ended cable with plug may be highly energized. Deadly hazard!

- Before commissioning the single ended cable with plug, a high voltage test must be carried out.

- Before commissioning the single ended cable with plug, it must be tested in accordance with EN 50215.

5.6 Storage of Double Ended Connector Cables

In the not mated condition, the double ended connector cables must always be stored in the driver's cab of the vehicle.
When storing the double ended connector cables in the respective vehicles or driver's cabs, the bend radii must be observed and the cable must be protected against shocks and contamination.

5.7 Contact Inserts

Connection Examples Contact Inserts

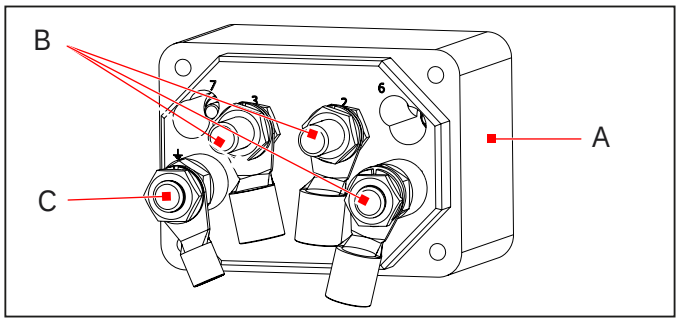

A Socket insert
B Main contacts
C PE contact (Protective Earth conductor)

Fig. 7: Connection example for socket insert B E-3S+PE+2/M

Number of contacts max.		3+PE+2 pole / 3+PE+4 pole		4+29 pole
Inserts	Pin insert	B E-3P+PE+2 /M	---	B E-4P+29 /ML
	Socket insert	B E-3S+PE+2 /M	B E-3S+PE+4 /M	B E-4S+29 /ML
	Dummy insert	---	B E-2P /P	---
Contact arrangement Contact identification marked on insert: Socket insert: Rear view Pin insert: Front view		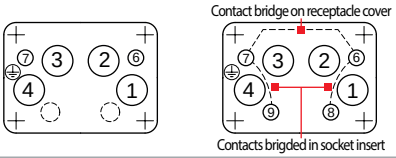		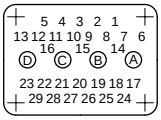
Main contacts	Contact type	V		W
	Terminals	Screws M10x25		Screws M8x20
PE contact*	Contact type	V		---
	Terminals	Screws M10x25		---
Control contacts	Contact type	C		C
	Terminals	Screws M5x10		Screws M5x10
	Crimp type	---		---

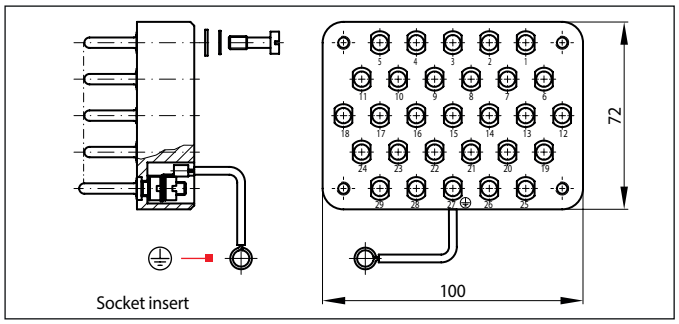

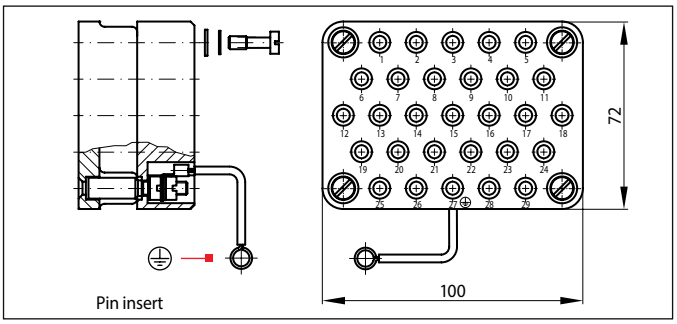

Fig. 8: Connection example 28-pole+PE (Dimensions in mm)

Number of contacts max.		28 pole+PE	29 pole
Inserts	Pin insert	B E-28P+PE /M	B E-29P /M
	Socket insert	B E-28S+PE /M	B E-29S /M
	Dummy insert	---	---
Contact arrangement Contact identification marked on insert: Socket insert: Rear view Pin insert: Front view		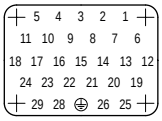	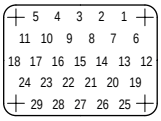
Main contacts	Contact type	---	---
	Terminals	---	---
PE contact*	Contact type	---	---
	Terminals	---	---
Control contacts	Contact type	C	C
	Terminals	Screws M5x10	Screws M5x10
	Crimp type	---	---

Number of contacts max.		59 pole+PE	
Inserts	Pin insert Socket insert Dummy insert	B E-59P+PE B E-59S+PE ---	BE-59P+PE/C1.5 or BE-59P+PE/C2.5 BE-59S+PE/C1.5 or BE-59S+PE/C2.5 ---
Contact arrangement Contact identification marked on insert: Socket insert: Pin insert:	 Rear view Front view	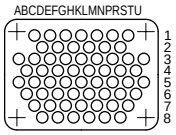	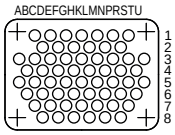
Main contacts	Contact type Terminals	--- ---	--- ---
PE contact*	Contact type Terminals	--- ---	--- ---
Control contacts	Contact type Terminals Crimp type	for contacts size H ** (Crimp) ** 1.5 mm² or 2.5 mm²	H *** Crimp 1.5 mm² or 2.5 mm²

** PE = protective earthing contact* *** Insert without contacts, please order separetely* **** Contacts included in delivery*

Crimp Contacts (Pin/Socket), nur für B E-59P+PE und BE-59S+PE

Contacts SHC-x, BHC-x Crimp contacts (pin/socket):

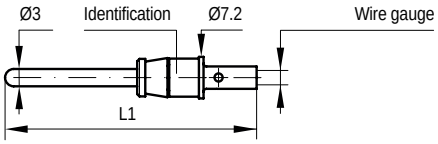

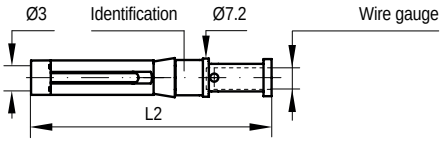

Pin contact

Ordering code	L1	Identification
SHC-1.50-Ag	43.6	2 grooves
SHC-2.50-Ni	43.6	3 grooves

Socket contact

Ordering code	L2	Identification
BHC-1.50-Ag	42.4	2 grooves
BHC-2.50-Ni	42.4	3 grooves

Specification

Wire gauge*	Rated current
1.5 mm²	16 A
2.5 mm²	27.5 A

* *For AWG sizes refer to the conversion table on our home page*
http://www.schaltbau-gmbh.com/files/awg-electrical-wire-conversion-table.pdf

(Dimensions in mm)

Tools for Crimp Contacts SHC-x and BHC-x

Extraction tool AWZ-C/H

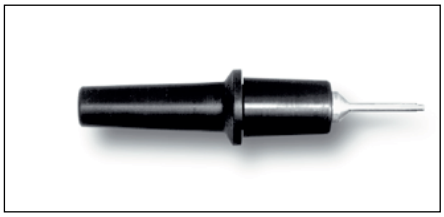

Fig. 9: Extraction tool for contacts Type C and Type H

Crimp tool CWZ-600-1

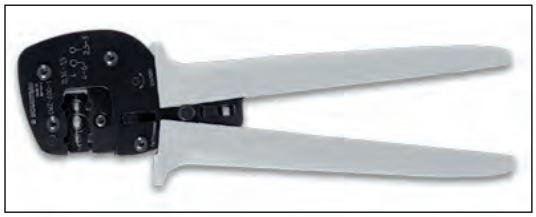

Fig. 10: Crimp tool for wire gauges ranging from 0.14 ... 6.00 mm²

6. Plugging Procedure

For the plugging procedure observe the requirements in chapter ***"2.3 Intended Use"***.

WARNING

Dirt, moisture, snow and ice in the interior of coupling receptacles or dummy receptacles contaminate the plug. The coupling of a contaminated plug to the coupling receptacle may lead to a life-threatening electrical shock.

- Always check if the interior of the receptacles is free from dirt, moisture, snow and ice before inserting a plug into a coupling receptacle or a dummy receptacle.
- Do not insert a plug into a receptacle when the latter is contaminated, moist or contaminated with snow and ice.
- Remove dirt, moisture, snow and ice without residues from the interior of receptacles and from the plug.
- Never couple a contaminated plug to the coupling receptacle.

WARNING

The plugging and disconnecting of the connectors on-load can cause electric arcs. When explosive substances or ignition sources of any kind are nearby, there is a risk of fire and explosion!

- Never plug and disconnect the connectors on-load.

CAUTION

The connectors contain sharp-edged components as well as components which are subject to mechanical tension. Crushing hazard / risk of injury!

- Wear safety gloves when plugging and disconnecting the connectors.

CAUTION

The connectors may grow warm during operation and they may become hot depending on the ambient temperature and the conditions of use. Risk of burn to the hands!

- Wear safety gloves when plugging and disconnecting the connectors in the case of a high ambient temperature.

NOTICE

Inappropriate handling when plugging or disconnecting may damage the connectors. The functional safety of the connectors is no longer guaranteed when parts are damaged.

- Take care that plug and receptacle do not tilt and that they are plugged without exceeding force.
- Make sure before the plugging procedure that plug and receptacle as well as the receptacle lid are not contaminated and are free from moisture, snow and ice. Remove any existing dirt.
- Make sure that in the not mated conditon
  - the plug of single ended connector cables is always inserted into a dummy receptacle
  - double ended connector cables are always stored in the driver's cab of the vehicle.
  - the receptacle lid is closed as intended
- Do not throw the plug with cable to the floor.

Note:
In case of a very low or very high ambient temperature which approximates the limits of the allowable operating temperature range specified in our catalogue ***F160.en*** in section "***Specifications***",
- a higher effort may be needed for the plugging and unplugging and
- the operational life span of plug and coupling receptacle may thus be reduced due to increased wear and tear.

6.1 Plugging

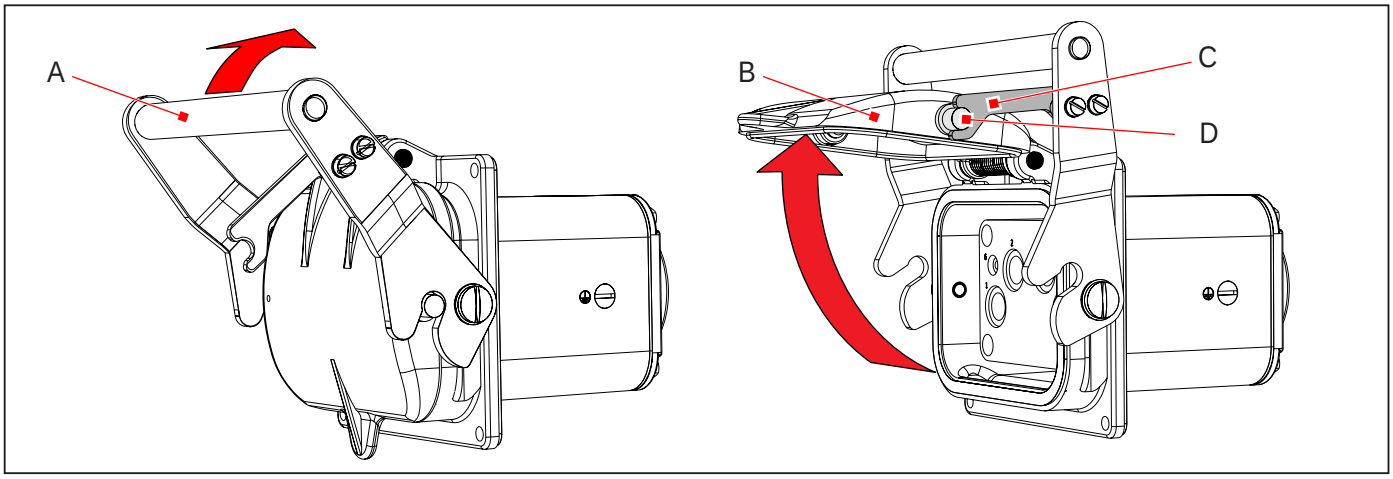

Fig. 11: Opening the receptacle lid

- Lift the handle (A) up to the stop. This will release the locking pins at the receptacle lid and unlocks the lid.
- Open the receptacle lid (B).
- Hook the locking pin (D) into the locking fork (C) in order to keep the lid in the open position.

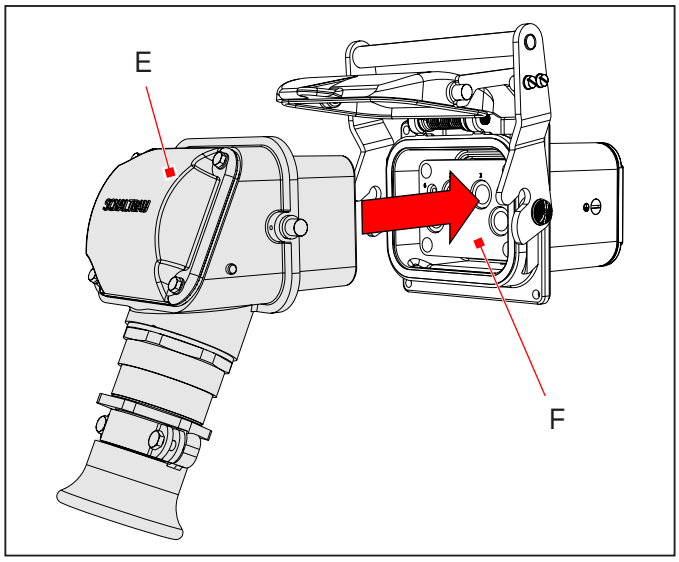

Fig. 12: Inserting the plug (E) into the receptacle (F)

- Then insert the plug (E) without excessive force up to the stop into the coupling receptacle (F).
  In doing so take care that plug and receptacle are aligned axially (a plug placed at an angle can be plugged by hand only with difficulty or not at all!).

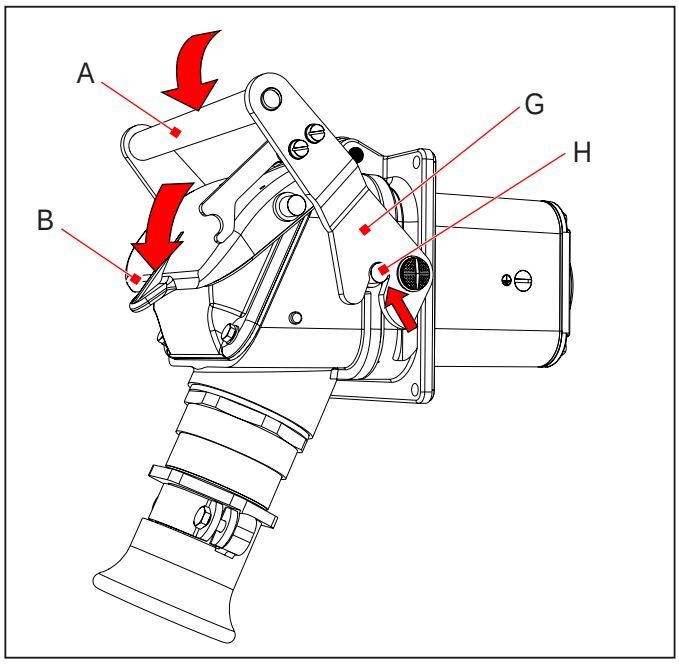

Fig. 13: Locking the plug

- Fold down the receptacle lid (B) by hand until it is resting on the plug.
- After that, fold down the handle (A) until both locking pins (H) and recesses on the side brackets (G) engage, thus the plug is pulled into the receptacle and gets locked.

6.2 Unplugging

- Lift the handle (A) up to the stop.
- Open the receptacle lid (B).
- Hook the locking pin (D) into the locking fork (C) in order to keep the lid in the open position.
- Remove the plug (E) from the receptacle (F).
  - Only pull on the plug, not on the cable.
  - Do not disengage the connectors with a hammer or other auxiliary tools!
- Close the receptacle lid (B) by hand.

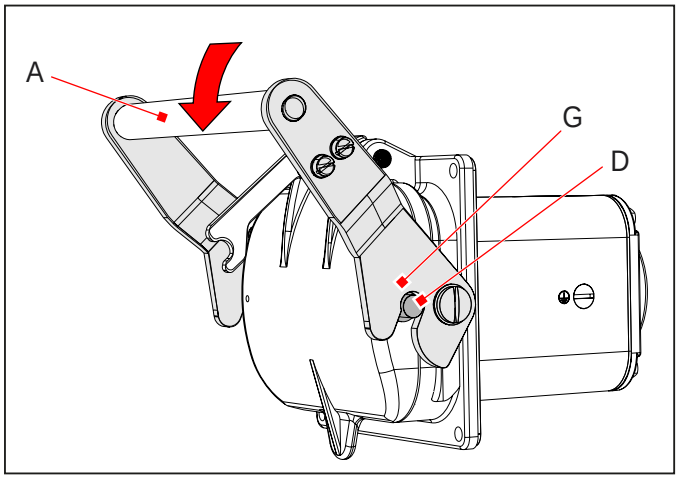

Fig. 14: Locking the the receptacle lid

- After that, fold down the handle (A) until both locking pins (D) and recesses on the side brackets (G) engage, thus the receptacle lid gets locked.
- Take care, that the receptacle lid has a parallel gap dimension with the receptacle shell all around and closes tightly.

7. Maintenance

Note the expert knowledge which is essential for carrying out maintenance work, mentioned in chapter "***2. General and Security Information***".

DANGER

The connectors contain components that carry voltage. Risk of electric shock!
Always observe the following safety regulations before beginning any work on electrical constructions:

- Disconnect
- Ensure that it is not possible to reconnect unintentionally
- Clearly mark your work area
- Make sure that there is no voltage present
- Earth and short circuit the installation
- Besides the main electric circuit, also disconnect additional and auxiliary circuits
- Insulate or cover adjacent energized parts
- Only an electrically skilled person may determine if there is no voltage present

All of the maintenance activities that may be carried out on the connectors by skilled personnel are listed below.

7.1 Intervals for Checks and Maintenance

The condition of the connectors depends on environmental influences. To ensure the correct function and a prolonged operational life span of the connectors, the following checks and maintenance must be performed regularly.

Checks / Maintenance	Interval
Visual inspection of - Plug and single ended connector cable - Plug and double ended connector cable - Receptacles - Receptacle lids - Cables - Contact inserts and contacts (in plug and receptacle)) - Dummy receptacles	► At every plugging
Complete maintenance during which all parts of the connectors have to be checked for damages and for correct functioning.	► Every 35 to 42 days

7.2 Visual and Functional Inspection at Each Plugging

At every plugging, all components of the connectors must be visually and functionally inspected.

DANGER

When damages are visible on cable, plug, receptacles, receptacle lid, or on seals or other elements of the connectors during the checks, the safety of the connectors is no longer guaranteed.

- Immediately give damaged connector components to maintenance.
- Immediately replace all damaged components with new components.

In addition to the visual inspection at every plugging, a complete maintenance, during which all parts of the connectors are checked for damages and correct function, must be performed every 35 to 42 days.

7.3 Visual and Functional Inspection/Maintenance of Coupling Receptacles

Connector element	Visual and functional inspection	Measures
Shell of the coupling receptacle	Check for: ► ease of movement when plugging ► dirt ► damage or wear and tear ► cracks and ruptured patches ► loose or missing fastening elements ► damaged seals ► tears and porosity in the receptacle lid seal ► varnish damage on the receptacle shell	In case of defects: ► remove existent dirt without leaving any residue ► immediately replace damaged parts ► do not re-varnish varnish damages ► replace coupling receptacles with varnish damages with new ones
Receptacle lid of the coupling receptacle	Check for: ► tears and porosity in the receptacle lid seal ► dirt ► damage or wear and tear ► cracks and ruptured patches ► loose or missing fastening elements ► secure and firm attachment of the receptacle lid ► damaged insulating piece in the receptacle lid (for receptacles with contact bridge on the lid) ► varnish damage on the receptacle lid	In case of defects: ► remove existent dirt without leaving any residue ► immediately replace damaged parts ► do not re-varnish varnish damages ► replace coupling receptacles with varnish damages with new ones
Torsion springs at receptacle lid	Check for: ► insufficient lubrication of torsion springs ► broken or overstretched torsion springs ► secure and firm fit of torsion springs	In case of defects: ► lubricate torsion springs with Molykote ► immediately replace damaged parts
Contact insert, socket contacts	Check for: ► damage or wear and tear ► dirt ► signs of moisture ► cracks and ruptured patches ► traces of burn-off or carbonisation ► sufficient contact pressure	In case of defects: ► remove existent dirt without leaving any residue ► when the contact inserts or socket contacts are damaged, immediately replace the contact insert and the socket contacts
Locking mechanism of the receptacle lid and the plug	Check for: ► defects at the locking mechanism ► damage or wear and tear at the locking pins of the receptacle lid	In case of defects: ► immediately replace a damaged locking mechanism ► immediately replace damaged or worn locking pins

7.4 Visual and Functional Inspection/Maintenance of Plugs with Single Ended and Double Ended Connector Cables

Connector element	Visual and functional check	Measures
Plugs	Check for: ► ease of movement when plugging ► damage or wear and tear - on the plug schell - on the contact insert - on the ferrule/cable gland - on the strain relief clamps ► cracks and ruptured patches ► damage or wear and tear at the locking mechanism of the plug ► bent pin contacts ► tight and firm fit of the pin contacts ► traces of burn-off or carbonisation on the pin contacts ► loose or missing fastening elements - on the plug schell - on the contact insert - on the ferrule/cable gland - on the strain relief clamps ► dirt, moisture, snow, ice ► signs of penetrated moisture	In case of defects: ► remove any existing dirt, moisture, snow or ice without residue ► immediately replace damaged parts
Cables (single ended / double ended)	Check for: ► damages to the cable sheath ► kinks or crushing points ► signs of mechanical excessive stress and of too high temperature	In case of defects: ► immediately replace damaged parts

7.5 Visual and Functional Inspection/Maintenance of Dummy Receptacles

Connector element	Visual and functional check	Measures
Dummy receptacle	Check for: ► damage or wear and tear ► dirt, moisture, snow, ice ► cracks and ruptured patches ► loose or missing fastening elements	In case of defects: ► remove any existing dirt, moisture, snow or ice without residue ► immediately replace damaged parts
Locking mechanism of the receptacle lid and the plug	Check for: ► defects at the locking mechanism ► damage or wear and tear at the locking pins of the receptacle lid	In case of defects: ► immediately replace a damaged locking mechanism ► immediately replace damaged or worn locking pins

8. Spare Parts

Spare parts for receptacles (*Fig. 15*)		
Item	**Designation**	**Pcs**
1	Contact insert (socket insert)	1
2	Seal for receptacle lid	1
3	Flat rubber seal	1
4	Seal for cover (housing part 2) rear cover	1

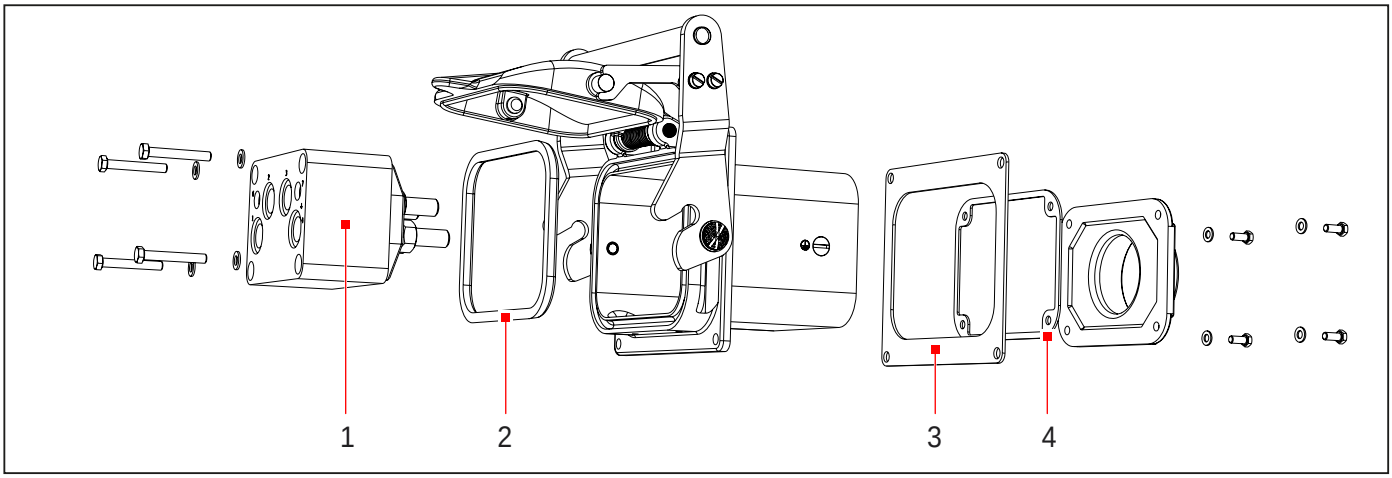

Fig. 15: Spare parts for receptacles

Spare parts for plugs with single ended cable / double ended cable (*Fig. 16*)		
Item	**Designation**	**Pcs**
5	Plug with single ended cable	1
6	Double ended connector cable with 2 plugs	1

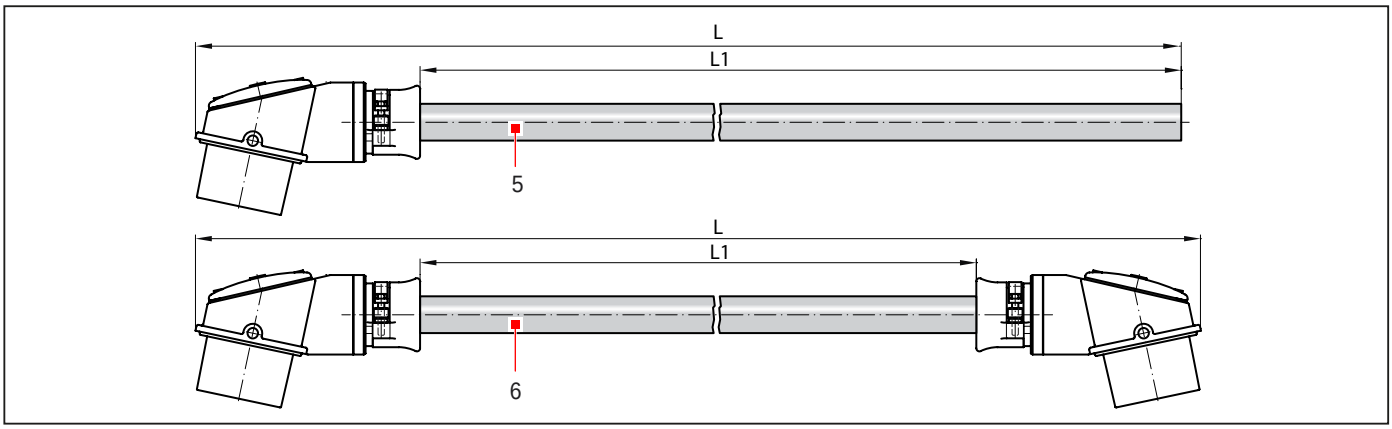

Fig. 16: Spare parts for plugs with single ended cable / double ended cable

9. Technical Data

Specifications and information on the material characteristics for the connectors in the B series are given in our catalogue ***F160.en***.
Due to our continuous improvement programme, the design of our products can be modified at any time. So some features may differ from the descriptions, specifications and drawings in the catalogue. You can download the latest update of the catalogue at: *schaltbau.info/download1en*. The updated catalogue renders the previous issue invalid.

Notes

Schaltbau GmbH

For detailed information on our products and services visit our website – or give us a call!

Schaltbau GmbH
Hollerithstrasse 5
81829 Munich
Germany

Phone +49 89 9 30 05-0
Fax +49 89 9 30 05-350
Internet www.schaltbau-gmbh.com
e-Mail contact@schaltbau.de

with compliments:

RoHS 2011/65/EC

Schaltbau GmbH manufactures in compliance with RoHS.

IRIS Certification

The production facilities of Schaltbau GmbH have been IRIS certified since 2008.

Schaltbau GmbH ISO 14001 certified since 2002

Certified to DIN EN ISO 14001 since 2002. For the most recent certificate visit our website.

Schaltbau GmbH ISO 9001 certified since 1994

Certified to DIN EN ISO 9001 since 1994. For the most recent certificate visit our website.

Electrical Components and Systems for Railway Engineering and Industrial Applications

Connectors

- Connectors manufactured to industry standards
- Connectors to suit the special requirements of communications engineering (MIL connectors)
- Charging connectors for battery-powered machines and systems
- Connectors for railway engineering, including UIC connectors
- Special connectors to suit customer requirements

Snap-action switches

- Snap-action switches with positive opening operation
- Snap-action switches with self-cleaning contacts
- Enabling switches
- Special switches to suit customer requirements

Contactors

- Single and multi-pole DC contactors
- High-voltage AC/DC contactors
- Contactors for battery powered vehicles and power supplies
- Contactors for railway applications
- Terminal bolts and fuse holders
- DC emergency disconnect switches
- Special contactors to suit customer requirements

Electrics for rolling stock

- Equipment for driver's cab
- Equipment for passenger use
- High-voltage switchgear
- High-voltage heaters
- High-voltage roof equipment
- Equipment for electric brakes
- Design and engineering of train electrics to customer requirements

Printed in Germany