SCHALTBAU
Connect Contact Control

3

Contactors

CT1115/04, CT1130/04 series

Single Pole NO
Power Contactors
for AC and DC

Manual C20/04-M.en

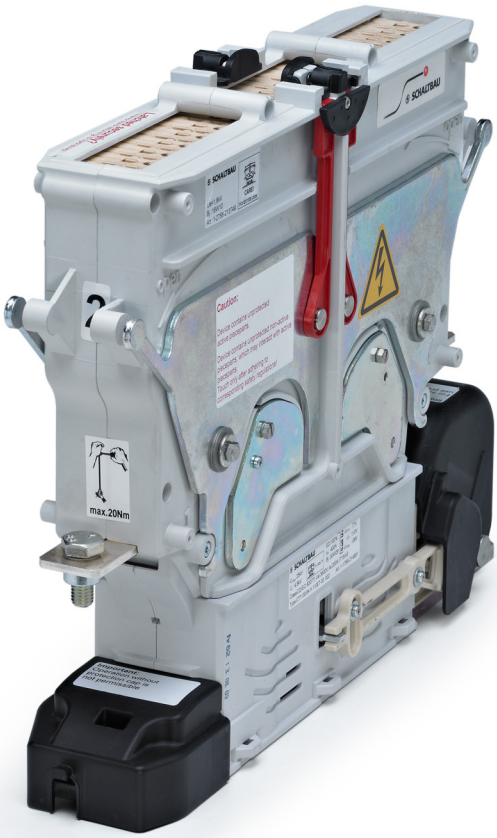

Revision History:

Rev.Level	Date	Page	Description	Name
1.1	26.10.2012	21	Part number of glue for ceramic protection insert changed from 13600310 to 13650290	Neuwieser
1.2	24.10.2017	10	Functional decription, diagram of switching status, page 10	Kapfer

Conventions for this Manual

To highlight particularly important instructions, the following symbols are used in this handbook.

NOTICE refers to technical features and methods aimed at facilitating work or to particularly important information.

DANGER refers to processes/operations which have to be followed exactly in order to avoid personal injuries.

CAUTION refers to processes/operations which must be followed to avoid damaging structural components, the system or other user materials.

WARNING refers to hazardous electrical voltages.

General legal notice

- CT1000 contactors must only be used under operating conditions according to the technical specification and the instructions in this manual.
- CT1000 contactors must only be used when all protective devices are present, have been installed properly and are fully operational.
- CT1000 contactors must not be converted or otherwise modified without prior consent of SCHALTBAU GmbH. Violations against this will result in the exclusion of liability on the part of the manufacturer.
- We reserve the right to make technical alterations without prior notice.
- For updated product information visit www.schaltbau-gmbh.com.
-
- Furthermore, we refer to our “General Terms and Conditions of Sale (GCS) for Goods and Services”.

Copyright notice

Table of Contents

Introduction

CT1000 contactors are air switching components with arc breaking in ceramic. They use a highly sophisticated principle of arc control, combining the permanent-magnetic and electro-magnetic blow-out technique.
This allows practically unrestricted operation for all AC and DC voltages and currents within the technical specification.

- CT1015 contactors are designed for nominal voltages of 1,500 V.
- CT1030 contactors are designed for nominal voltages of 3,000 V. Due to the very high rated insulation voltage CT1030 contactors can be used for peak voltages up to 5,000 V.
- This manual refers to single pole contactors with a conventional thermal current of 400 A. For single contactors for 800 A refer to manual C20/08-M.

CT1000 contactors provide excellent switching performance from very small up to heavy loads.
CT1000 contactors are available for vertical and horizontal mounting.

CT1000 contactors have been designed and tested according to National and International Railway Standards. Due to their unique features they can also be used in a variety of industrial applications.

CT1000 contactors offer the following design-related advantages:

- Compact, rugged design
- 2 voltage levels, several current levels
- Double-break contacts, cadmium-free contact tips
- 1-, 2- (and 3-) pole versions
- Easy maintenance:
  - Easy inspection of main contact tips, easy replacement of main contacts
  - Easy replacement of arc chamber (upper module)
- Drive system suitable for standard railway supply voltages and tolerances. No economy circuit required for standard versions. Drive systems for industrial applications on demand.
- Insulation coordination:
  - Functional insulation for main circuit
  - Basic insulation between main circuit and protective earth
  - Reinforced insulation between main circuit and control circuit / main circuit and auxiliary circuits
- Long mechanical and electrical life

No regular maintenance required. Inspection intervals and exchange of wear parts depending on specific application.

Safety information

Electrical hazards

CT1000 contactors are high-voltage switches. Getting into contact with conductive parts of the contactors can result in serious injury or even death!

Active parts are all piece parts associated with the main circuit. All metal parts visible may potentially become active under fault conditions. A respective label is attached to the contactor. This label must not be removed.

For safety reasons the contactors must be connected to earth. An earth terminal is provided for that purpose. The wire gauge must be observed according to the specific short-circuit conditions.

Before carrying out any inspection and maintenance work on CT1000 contactors, the contactors must be de-energized and in addition life wires made safe by earthing. If the environment has no disconnecting and earthing device, other suitable measures must be used to ensure that no voltage is present. Please make sure that any capacitors in the main circuit are discharged before touching main wires. We recommend securing the supply lines to prevent switching back on.

Safety notices

The 2 black protection caps must not be removed for operation. They are part of the insulation system. Operation without the 2 black protection caps is not permissible.

All inspections and the replacement of components may only be performed by qualified personnel and must be done according to Schaltbau specification.

All components which have to be replaced must be original components defined by Schaltbau.

During continuous operation the contactors will warm up. It is recommended to wait an appropriate time before starting any service and touch the contactors.

General application notes

CT1000 contactors are designed to be mounted in environments defined by pollution degree PD3 according to EN60077-1:

Pollution degree PD3

Conductive pollution or dry non-conductive pollution occurs which becomes conductive due to condensation which is to be expected.

Example: Indoor location not directly exposed to rain, snow and heavy dust.

CT1000 contactors contain strong magnets for the permanent-magnetic blow-out. Make sure that these magnets do not attract any ferromagnetic particles into the contactors, either opened or closed.

These magnets may destroy data on credit cards or such.

During the short time of the switching-off operation strong magnetic fields are generated in the vicinity of the pole plates. They may affect other components close to the contactor.

Technical data

Refer to catalogue C20, data sheets and measured drawings.

Applied standards

Refer to catalogue C20.

EN60077-1: 2003-04	Railway applications - Electric equipment for rolling stock Part 1: General service conditions and general rules (IEC 60077-1:1999, modified)
EN 60077-2: 2003-04	Railway applications - Electric equipment for rolling stock Part 2: Electrotechnical components; General rules (IEC 60077-2:1999, modified)
EN 50124-1: 2010-11	Railway applications - Insulation coordination Part 1: Basic requirements - Clearances and creepage distances for all electrical and electronic equipment
EN 61373: 2011-04	Railway applications - Rolling stock equipment Shock and vibration tests
EN 50125-1: 2010-11	Railway applications – Environmental conditions for equipment Part 1: Equipment on board rolling stock

Description

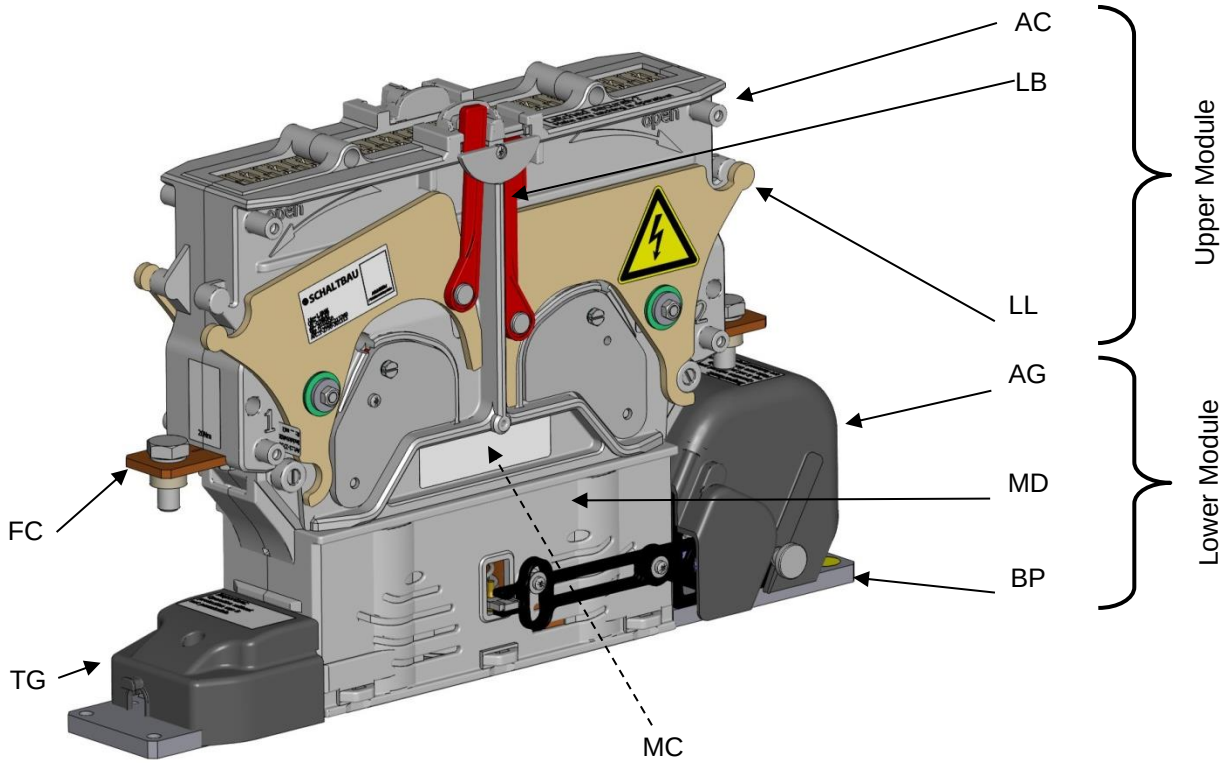

CT1000 contactors consist of two main modules:

- Lower Module:
  Magnetic drive (MD) with moving contact bridge (MC, not visible); base plate (BP); auxiliary contact group (AG); coil terminal group (TG); AG and TG are under protection caps.
- Upper Module:
  Fixed contacts with main terminals (FC); arc chamber (AC); latching levers (LL) and lock bars (LB)

Lower Module

- Magnetic drive (MD) with moving contact bridge (MC)
  - Compact magnetic drive system for DC voltages.
  - Designed for standard railway supply voltages and tolerances. Standard nominal supply voltages are U_s = 24 V and U_s = 110 V, tolerances from 70% up to 125% of U_s. Other nominal supply voltages are available on request.
  - Double-break moving contact bridge.
  - Polarity independent overvoltage protection device.

The value of the overvoltage limitation is part of the magnetic system and must not be changed or short-circuited by external means. It is explicitly stated that the use of diodes is prohibited for that purpose. Take care there is no such diode in the external control circuit.

- Base plate (BP)
  - 4 fixation holes
  - Earthing terminal

  The contactor should be mounted on a metal rack to provide a secure mounting as well as a heat sink for the magnetic drive.

– Auxiliary contact group (AG)
  Standard:
  - 1 contact to indicate the “well closed” position of the main contacts (EN60077: a1)
  - 1 contact to indicate the “well opened” position of the main contacts (EN60077: b0)
  - 2 NO/NC contacts
  Option:
  - 4 NO/NC contacts

  - M3 screw or 6.3 x 0.8 mm fast-on terminals
  - Protection cap (can be removed and fixed only when the Upper Module has been removed)

– Coil terminal group (TG)
  - Cage clamp terminals
  - Protection cap (can be removed and fixed only when the Upper Module has been removed; fixation with screw M4 x 10)

Upper Module

– Fixed contacts with main terminals (FC)
  - Press nuts M10 for easy connection of cables
  - Mounting hole Ø 12.7 mm for easy connection of current bars
  - Minimum wire gauges for connecting cables or current bars must be observed.
  - Double-break contacts

– Arc chamber (AC)
  - Permanent-magnetic blow-out system with magnets and pole plates
  - Electro-magnetic blow-out system with blow-out coils and pole plates
  - Arc guidance plates
  - Ceramic inserts for arc extinction

– Latching levers (LL)
  - Latching and unlatching simply by turning pole plates. No tool required.
  - Large handles for easy operation.

– Lock bars (LB)
  - Simple locking and unlocking mechanism with optical control. No tool required for unlocking.

The Upper Module must be latched and completely locked before starting operation.

Red bars indicate contactors for vertical mounting position

Yellow bars indicate contactors for horizontal mounting position.

Functional description

The diagram below shows the switching states of the CT1000 contactors.

Typical values:

- Typical pull-in time: 120 ms
- Typical drop-off time: 60 ms
- Time constant of magnetic drive: app. 90 ms
- Settling time for b0 switch: up to 10 ms

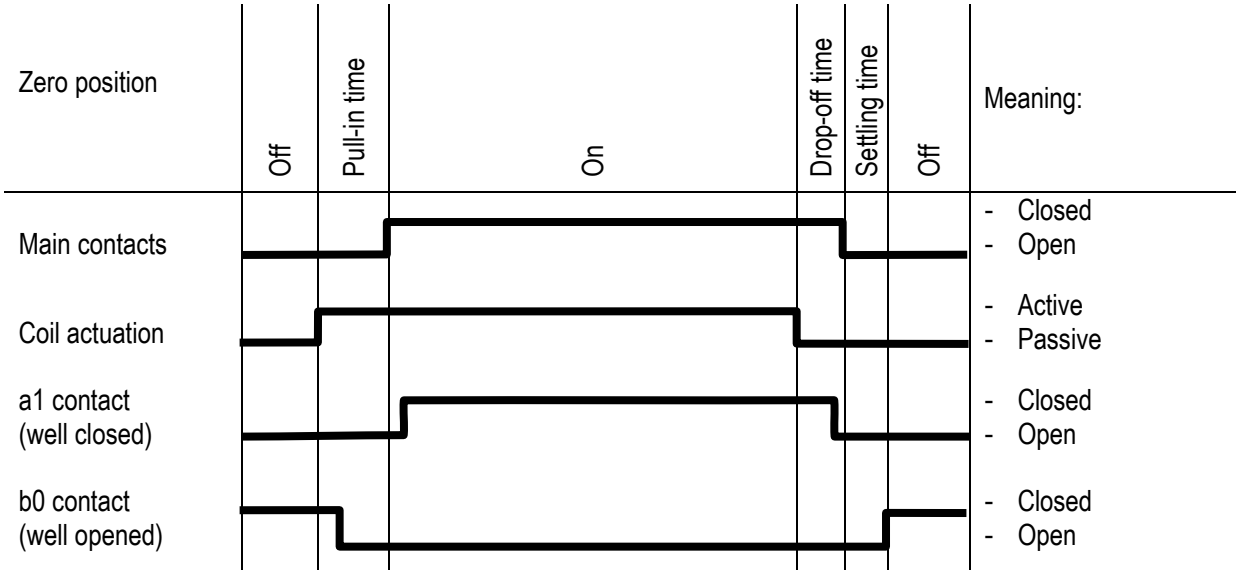

Order code

Example: **CT1130/04 V 110ET-00 001**

Number of poles
11 1-pole version

Nominal voltage
15 1.5 kV
30 3 kV

Conventional thermal current
04 400 A

Mounting position
H Horizontal (yellow lock bars)
V Vertical (red lock bars

Supply voltage
24 24 V
110 110 V

Supply voltage tolerance
E -30% … +25%

Coil suppression
T Suppressor diode

Auxiliary contacts

00	1x a1 (S870, refer to catalogue D70) 1x b0 (S870, refer to catalogue D70) 2x NO/NC (S826, refer to catalogue D26)	M3 screw type terminals
01	1x a1 (S870, refer to catalogue D70) 1x b0 (S870, refer to catalogue D70) 2x NO/NC (S826, refer to catalogue D26)	Flat tabs 6.3 x 0.8
02	4x NO/NC (S826, refer to catalogue D26)	M3 screw type terminals
03	4x NO/NC (S826, refer to catalogue D26)	Flat tabs 6.3 x 0.8

Special versions:

Storage

Storage

Schaltbau recommends storing the contactors in the original packing box. The contactors should be stored in a dry and suitable place.

Return shipments

Schaltbau recommends using the original packing box for any return shipments. If no original packing box is available care should be taken to pack the contactor in a way that prevents damage during the shipment.

Installation

Unpacking and handling

Before opening the packaging, perform a visual inspection for any signs that could indicate damage having occurred during transport (impacts, bumps, falling etc.).

Unpack the contactor and put it on the table in an upright position. With one hand press the release buttons on top of the arc chamber together and turn the 4 levers down one by one to unlatch the Upper Module. Lift the Upper Module and put it on the table in an upright position.

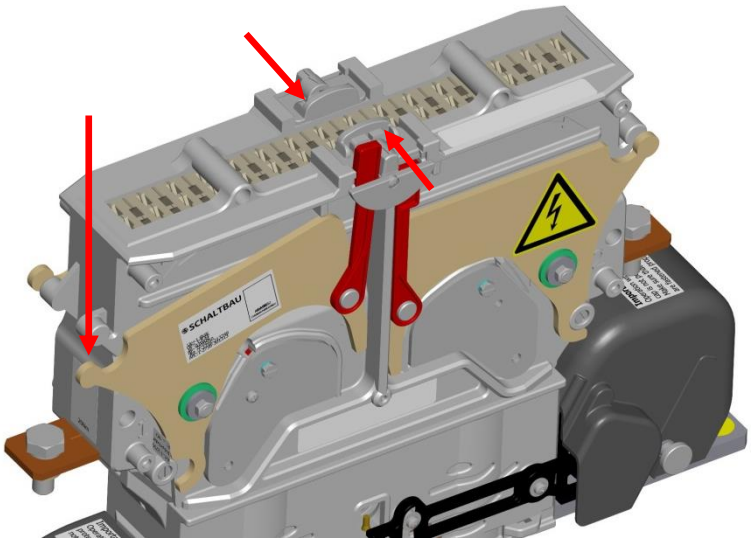

Remove both protection covers (the small one is fixed with a M4 x 10 screw, the big one with knurled thumb screws).

The Lower Module is ready for mounting.

If the contactor has been subject to excessive shock influence (e.g. during transport) do not install the contactor.

Only single pole contactors may be carried holding the Upper Module provided the contactors are safely locked and the devices are undamaged.

Operating position

Make sure that you have received the correct contactors for the application.

> CT1000 contactors for horizontal mounting must only be mounted horizontally (Lock bars are yellow, position is also shown on the labels); they can be mounted in any position in reference to the direction of movement of the vehicle. Make sure that both Upper and Lower Module are for horizontal mounting.

> CT1000 contactors for vertical mounting must only be mounted vertically (Lock bars are red, position is also shown on the labels). Make sure that both Upper and Lower Module are for vertical mounting.

CT1000 contactors can be mounted horizontally or vertically.

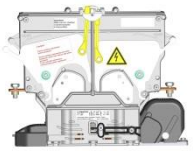

Horizontal mounting position

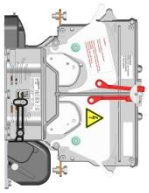

Vertical mounting position 1

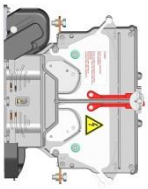

Vertical mounting position 2

In most cases, the contactors are mounted on mounting plates or mounting frames. They must be solid enough to carry the weight of the contactors under the shock and vibration conditions of the railway environment.

The contactors (Lower Module) are fixed with 4 or more mounting screws, depending on the number of poles. The screws (and if applicable the nuts) must be steel grade 8.8. Schaltbau strongly recommends Schnorr-Washers (or similar) to secure the screws. The screws must be tightened with the rated torque permissible for the screws and the nuts.

Mechanical requirements

Device dimensions

Refer to the dimensioned drawings of the contactors.

Installation dimensions

Refer to the dimensioned drawings of the contactors.

Electrical requirements

The minimum clearances to earth or other components must be observed. Refer to the dimensioned drawings for details.

Switching electrical currents at high voltages will produce arcing and plasma may exit out of the arc chambers. It is essential to observe the minimum clearance to earth and to the connecting bus bars to avoid the risk of a flash-over. The minimum clearance has been tested and specified in relation to the switching capacity of the contactors.

For switching heavy loads allow a minimum time of app. 30 s between switchings. Allow a recovery time of at least 10 min after 3 heavy load switchings in succession.

Ensure sufficient ventilation, especially in the case of heavy arc switching. Allow the exchange of surrounding atmosphere to avoid the risk of flashovers and excessive corrosion.

The minimum gauges for the main terminals and the earth terminal must be observed. Schaltbau strongly recommends current bars for the connection of the main terminals with a cross section of 40 x 4 mm.

If wires are being used the wire gauges must be selected in coordination with their insulation class and the operating conditions.

Undersized gauges for the earth terminal may produce a safety hazard.

Refer to catalogues for the power consumption of the magnetic drive system and the electrical data of the auxiliary switches.

- C20 (Catalogue for Contactors CT1115/04, CT1130/04, CT1115/08 and CT1130/08)
- D26 (Catalogue for Snap Action Switches S826)
- D70 (Catalogue for Snap Action Switches S870)

Installation must be carried out by qualified personnel only.

Mechanical installation

Clean the surface of the mounting plate and the base-plate of the contactor (Lower Module).

Put the Lower Module on the mounting plate and secure with the appropriate screws using the correct tightening torque. Schaltbau strongly recommend Schnorr-Washers (or similar) to secure the screws.

Electrical installation of the auxiliary switches

Connect the wires for the auxiliary contacts. For the a1 and b0 contacts (Switches S870) no polarity must be observed. For the general purpose contacts (Snap action switches S826) the polarity must be observed. The position of the switches and the terminal numbers are shown on a label on the protection cap. Bundle and fix the wires as shown below.

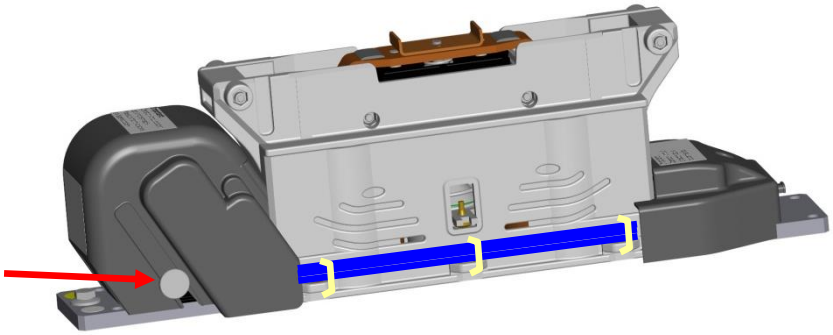

Fix the protection cap and tighten the knurled thumb screws. Make sure that all the washers are close to the nuts when you mount the cover. The washers must remain outside of the cover. Secure the nuts by hand force as tight as possible.

The protection cap for the auxiliary switches must not be removed for operation. It is part of the insulation system. Operation without the protection cap is not permissible.

Electrical installation of the magnetic drive

Connect the coil control wires to the cage clamp terminals. No polarity must be observed. Bundle and fix the wires as shown below.

Fix the protection cap with the M4 x 10 screw (plus flat washer and Schnorr washer).

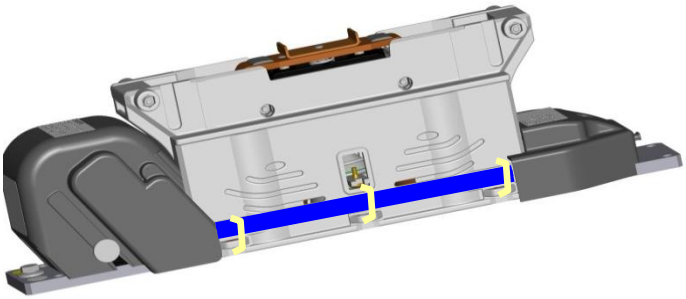

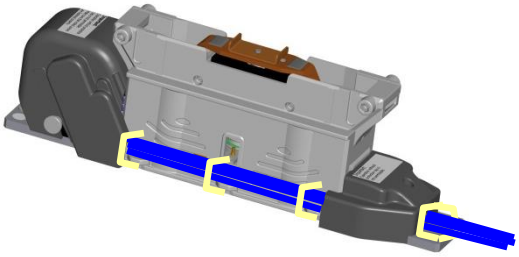

The coil is protected against excessive overvoltages (which will occur when the coil is switched off) by a bi-directional suppressor diode.

The value of the overvoltage limitation is part of the magnetic system and must not be changed or short-circuited by external means. It is explicitly stated that the use of diodes is prohibited for that purpose. Take care there is no such diode in the external control circuit.

Mounting of the Upper Module

Mount the Upper Module onto the Lower Module. Make sure all 4 latching levers are in the open position. Attention: The modules are mechanically coded. Only one mounting position is possible. Attach the Upper Module in the correct position. Optical marks and coding pins are provided to ensure the proper positioning. Do not try to force the Upper Module into the wrong position!

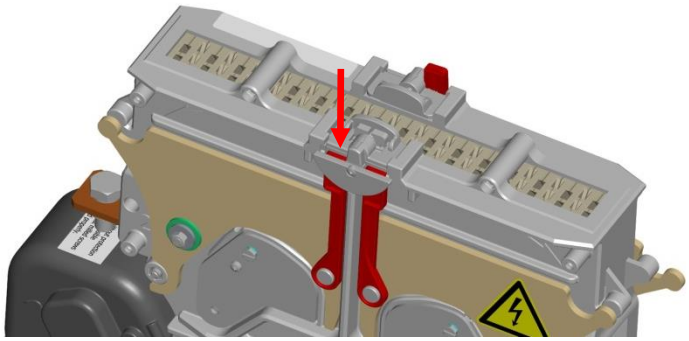

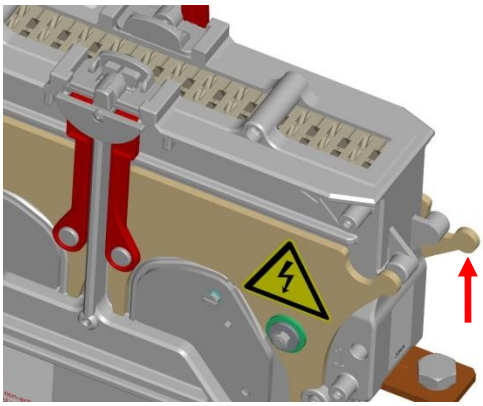

Close the 4 latching levers and make sure that all 4 lock bars have snapped in safely. The Upper Module must be fixed tightly to the Lower Module.

Electrical installation of the main circuit

If you use wires for the connection of the main terminals, the cable lugs can be placed on top of the main terminals and tightened with the appropriate screws. Schaltbau strongly recommends Schnorr-Washers (or similar) to secure the screws. The screws must be tightened with the rated torque (refer to label on the Upper Module).

If you want to use current bars as recommended by Schaltbau, it is better to mount the bars below the main terminal. This way maintenance is much easier and the upper module can be removed without removing the current bars. Schaltbau is supplying CT1000 contactors without the press nut for this purpose.

Make sure the connection areas are free of corrosion.

The photos show the connection of CT1130/08. The connection of CT1115/04 and CT1130/04 is identical.

If the current bars are even slightly flexible, they can be connected to the main terminals directly.

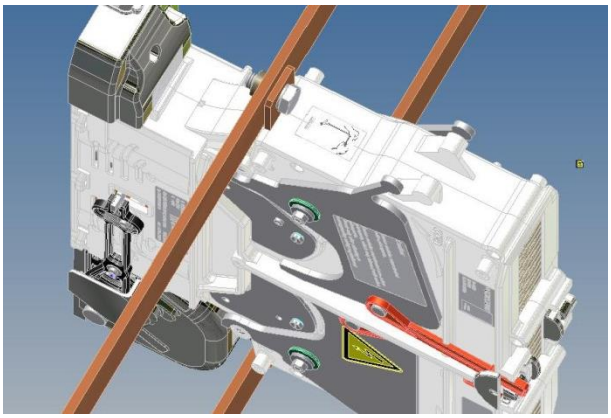

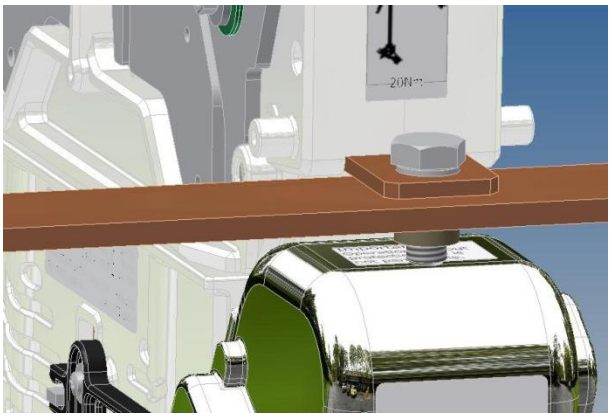

If the current bars are rather inflexible it is recommended to use an additional angled bar. This way it is possible to compensate mechanical tolerances between the mounting platform for the lower module and the current bars in all 3 axes.

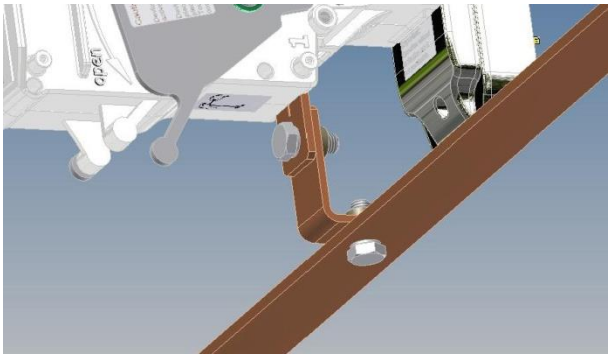

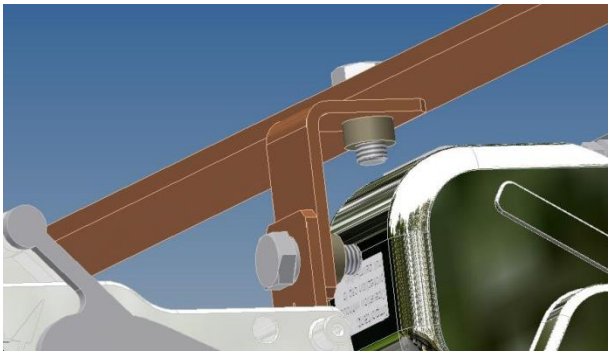

The use of press nuts in the current bars will simplify installation and maintenance.

Electrical installation of the earth terminal

Connect the earthing cable to the earth terminal with the appropriate screw. Schaltbau strongly recommends a Schnorr-Washer (or similar) to secure the screw.

Commissioning

After installation the following checks are recommended:

a) Check the protective earth

b) Check the main connections

c) Check the control connections

d) Check the latching and locking between Upper and Lower Module

e) Check that both protection covers are fitted

f) Several activation and deactivation operations of the contactor without the main circuit active

g) Check the function of the auxiliary contacts

Maintenance

CT1000 contactors are maintenance-free within the rated mechanical life time. The electrical life time depends on the number of switchings under heavy load conditions and may vary for different applications. In normal use, this corresponds to a decade-long operating period.

Recommended regular service intervals

Checking activity designation	Checking interval
Optical inspection from outside	1x annually
Inspection of the main contacts	1x to 2x annually depending on application
Inspection of the auxiliary contacts	Every 2 years

Unscheduled service intervals

Extraordinary services need only be carried out if there has been a significant and extraordinary recorded number of switchings under fault conditions.

If the contactors are being used in particularly dirty environments, the checking intervals for the optical inspection should be shortened, because dirt can impair the insulation clearances and there is therefore the possibility of a shorter service life or an operational fault.

Inspection activities

- **High voltage supply cables or current bars**

Check of the high voltage supply cables/bars and the tightening torques of the fastening screws.

- **Earthing**

Check of the supply cables and the tightening torques of the fastening screw.

- **Cleaning**

In case of excessive dirt the surface of the contactors should be cleaned.

- **Inspection of the main contacts**

Disconnect the main terminals and remove the Upper Module. Inspect the main contacts (both fixed and movable contacts).

It requires some experience to evaluate the state of the contacts. Even after only a few switchings under load the contacts look used and “polluted” for the inexperienced eye. Contacts need only to be replaced if the wear of the contact tips is more than 70%.

Replace the Upper Module and secure it. Reconnect the main terminals.

- **Inspection of the auxiliary contacts**

Disconnect the main terminals and remove the Upper Module.

Remove the protection cover. The auxiliary switches are visible for a simple optical inspection from the outside (housings are clean and do not show signs of short-circuits etc.). Under normal working conditions (no short circuit switching) the life time of the auxiliary switches exceeds those of the contactors.

Replace the protection cap and the Upper Module and secure it. Reconnect the main terminals.

Auxiliary switches S870 are not visible when you have removed the cap. You will need to remove the 2 screws and lift the assembly for inspection.

Spare parts, replacement of parts

The contactors are maintenance-free. There is therefore no general provision for replacing components during its service life.

However, in case of permanent heavy load switchings, of failures, of short-circuit switchings or in similar cases spare parts are offered by Schaltbau.

Only original spare parts are to be used as a replacement

MC CT1015/04
CT1015/04, terminal with fixed contact (order 2 per pole)

MC CT1030/04
CT1030/04, terminal with fixed contact (order 2 per pole)

CB CT1030/04
CT1015/04 / CT1030/04, moving contact bridge (order 1 per pole)
PI CT1030/04
CT1030/04, protection insert (order 2 per pole)

Main contacts and ceramic protection insert

If the main contacts have to be replaced all 4 contacts must be replaced (the moving bridge and the 2 fixed terminals).

Disconnect the main cables/current bars

Remove the Upper Module.

Remove the protection caps

Dismount the contactor.

Remove the moving bridge

Remove the nut at the bottom of the contactor with a number 8 socket wrench and put the nut and the washer aside. The nut is secured with red locking varnish which will be destroyed during that operation. The moving bridge can be pulled out of the guidance.

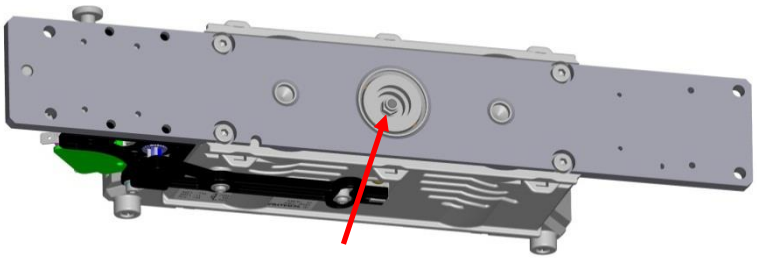

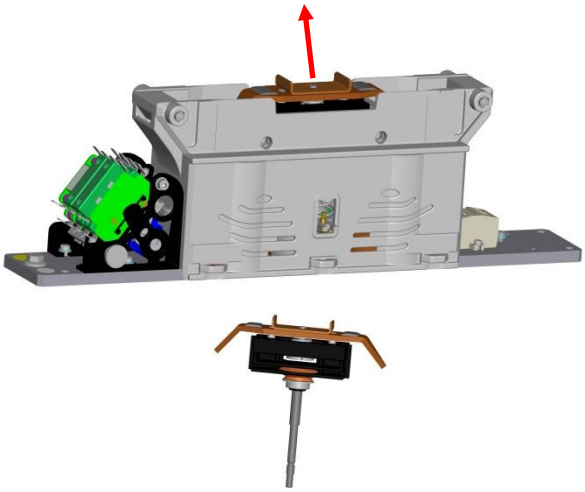

Insert the replacement bridge

Mount the new bridge from the top and secure it with washer and nut (Torque = 4 Nm). Secure the nut again with red locking varnish.

Test the replacement bridge

Lift the bridge. The bridge must be movable up and down easily.

Remove and replace the fixed contacts (and ceramic protection insert)

Put the Upper Module onto the table upside down on a smooth surface. The latching levers must be in the closed position to avoid damage

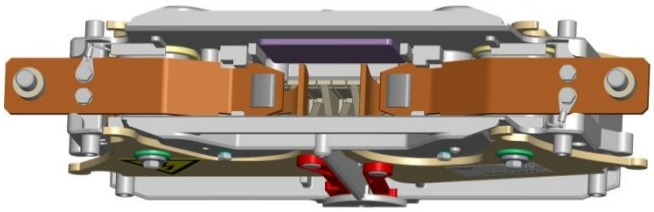

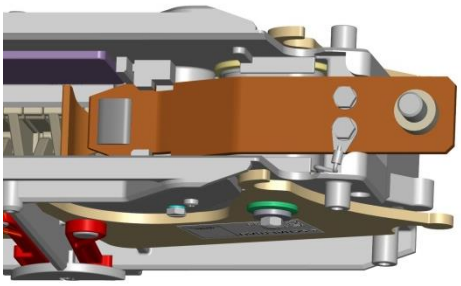

Remove all four M5 screws with a number 8 socket wrench and put the screws and washers aside. Two screws are secured with red locking varnish which will be destroyed during that operation.

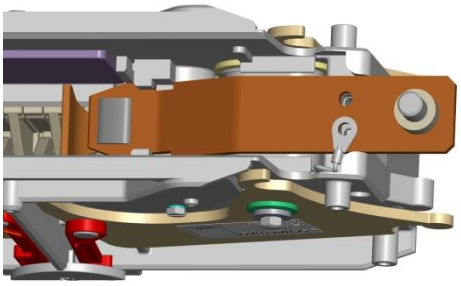

The fixed contacts must be pushed slightly to the middle to meet the gap and can then be removed easily.

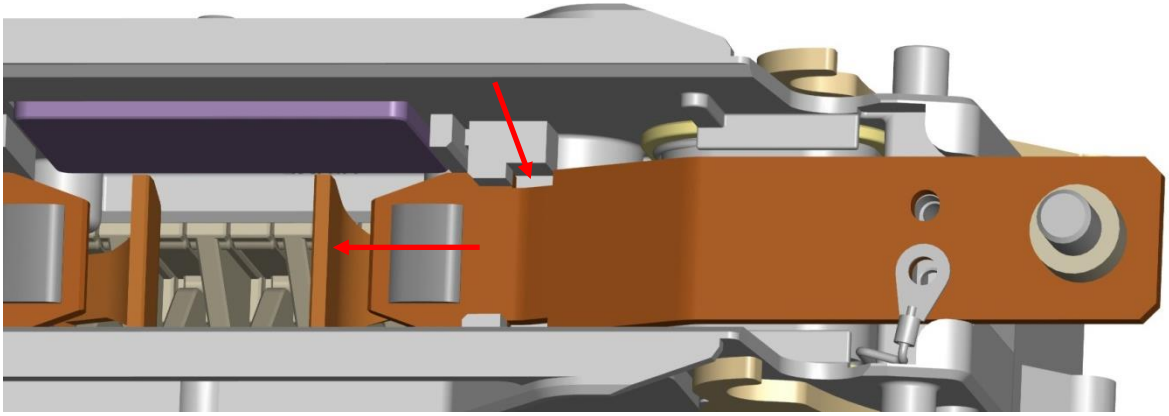

The copper wire may be pushed slightly to the side.

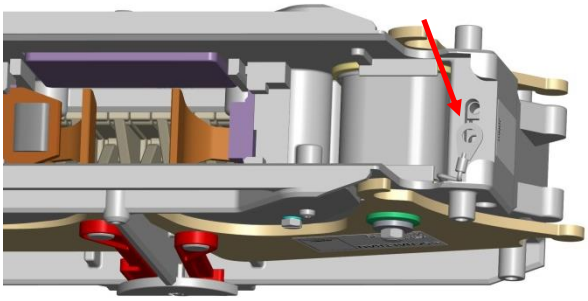

The following steps concerning the ceramic protection insert are for CT1030/04 only.

The ceramic protection insert is fixed with glue. It has to be replaced only in case of apparent wear or damage.

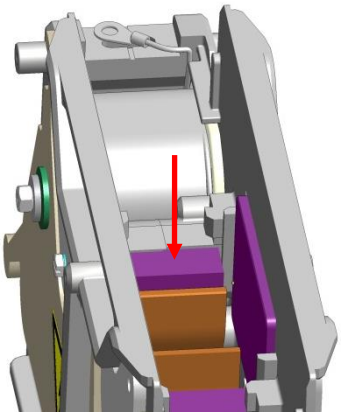

Cut the glue carefully with a knife and pry it open.

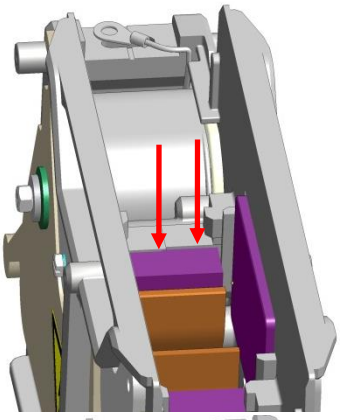

Remove all remains of old glue.

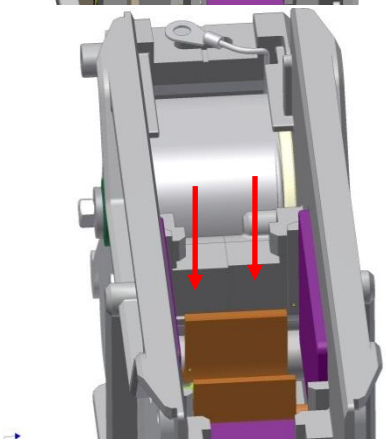

Apply glue to the replacement insert (use Weicon, Flex-Super white, part number 13650290 only).

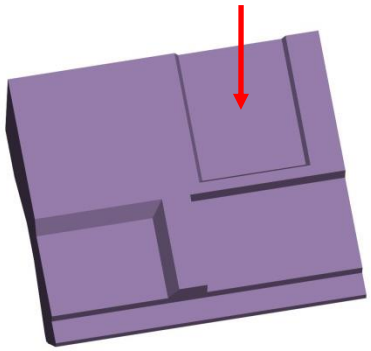

Place the new protection insert in the correct position and push it against the plastic guidance. Remove excessive glue. The insert must be in-line with the plastic surface without projecting length.

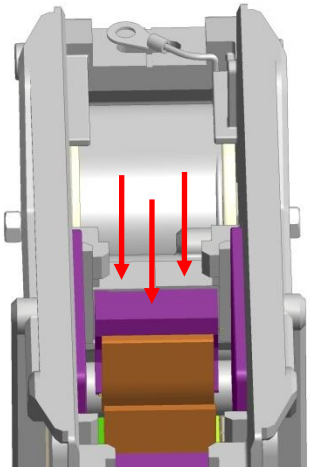

Reassembly of the fixed contacts

Control the position of the nuts prior to assembly of the new fixed contacts.

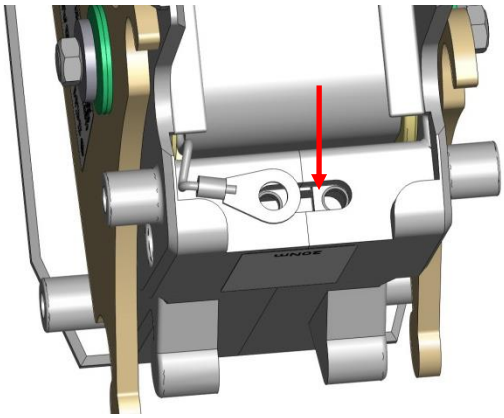

Replace the fixed contacts and push them into the locked position.

Retighten the four M5 screws
(Torque = 5 Nm).

Check that the cable lug is tight.

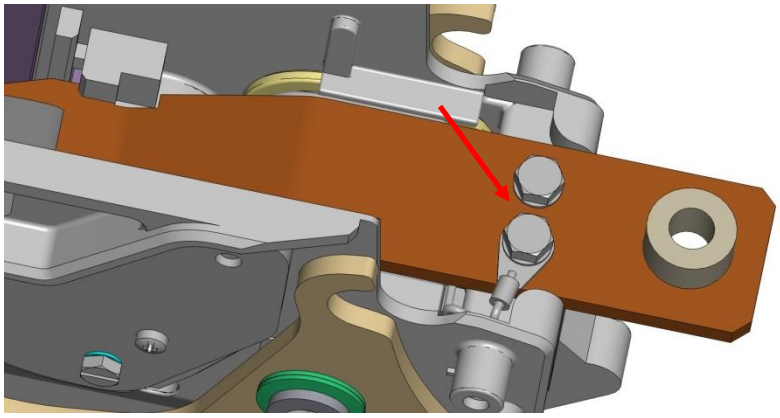

Take special care concerning the correct position of the wires, close to the plastic **(CT1115/04)**.

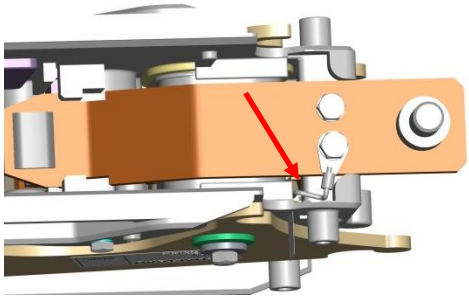

Take special care concerning the correct position of the wires **(CT1130/04)**.

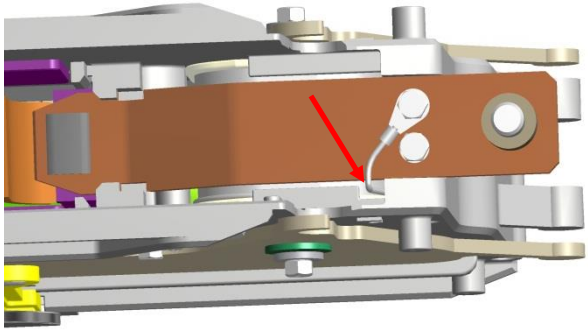

Reinstall the Lower Module

Replace the protection cap for the auxiliary switches

Replace the protection cap for the magnetic drive

Replace the Upper Module and secure it. Reconnect the main cables/current bars.

Auxiliary contacts

If the auxiliary switches have to be replaced all switches of one type (S826 or S870) should be replaced.

Only original spare parts are to be used as a replacement

CC CT1130/04
Protection cap, coil terminal

CA CT1130/04
Protection cap, auxiliary switches

AS 870
Switch group with 2x S870 (order 1 per contactor as appropriate)

S826 a L
Snap action switch S826 (order 2 or 4 per contactor as appropriate)

Disconnect the main cables/current bars

Remove the Upper Module.

Remove the protection caps.

Dismount the contactor.

Removal of the auxiliary switch subassembly

Remove the 2 knurled thumb screws and the 2 Allen head screws M4.

Note the mounting position of the subassembly and the individual switches. Pull the subassembly out in the direction of the arrow.

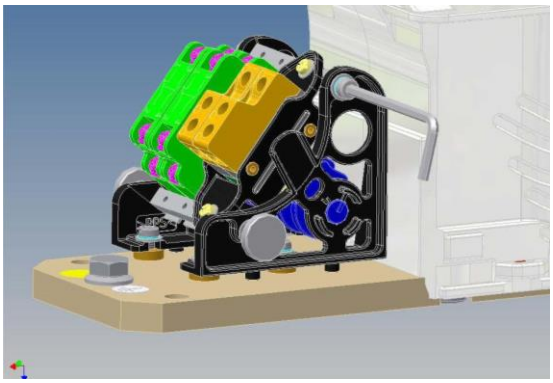

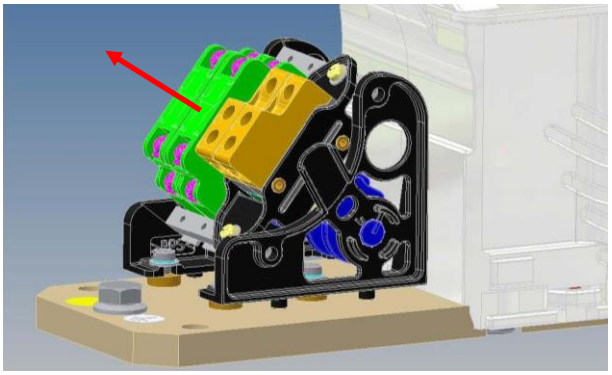

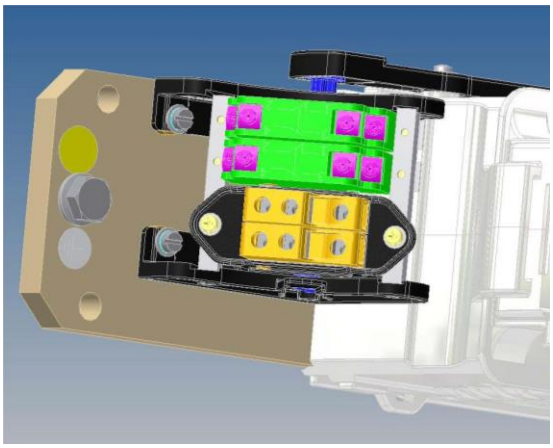

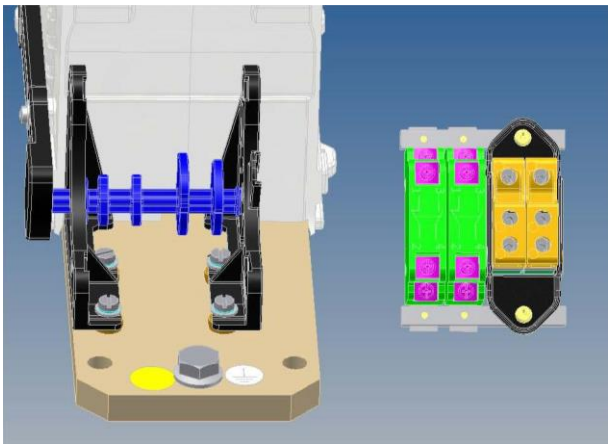

Dismount and mount the switches or the S870 switch group one by one to avoid wrong mounting. If all switches are removed together and mounted again a readjustment of the frame is necessary.

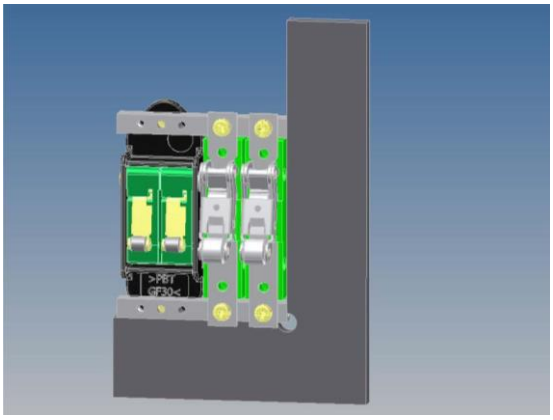

Changing the S870 assembly:

Use a **POZIDRIV** ® cruciform screw driver size 1 to remove the 2 screws on the top of the frame. Mount the replace assembly in the same mounting position. Do not forget the washers.

Changing the S826 snap action switches

Use a **POZIDRIV** ® cruciform screw driver size 1 to remove the screws (2 for each switch) on the bottom of the frame. Mount the replace switch in the same mounting position. Do not forget the washers.

Reassembly of the switch subassembly

After all switches have been replaced and the frame has been adjusted to a rectangular position the subassembly can be carefully reinserted into its original mounting position. Make sure to mount it in the correct same position as before.

Tighten the 2 Allen head screws M4. The 2 knurled thumb screws should be just turned once. Do not forget the washers.

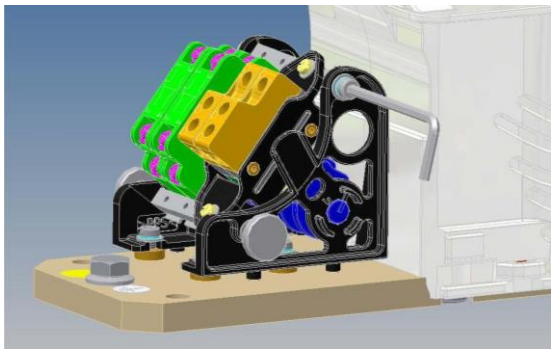

The actual version may differ from the photos. Standard versions are 4x S826 and 2x S826 + 2x S870 (as shown for CT1130/08, same for CT1115/04 and CT1130/04).

Reinstall the Lower Module

Replace the protection cap for the auxiliary switches

Replace the protection cap for the magnetic drive

Replace the Upper Module(s) and secure it. Reconnect the main cables/current bars.

Schaltbau GmbH

For detailed information on our products and services visit our website – or give us a call!

Schaltbau GmbH
Hollerithstrasse 5
81829 Munich
Germany

Phone +49 89 9 30 05-0
Fax +49 89 9 30 05-350
Internet www.schaltbau-gmbh.com
e-Mail contact@schaltbau.de

with compliments:

RoHS 2011/65/EC

Schaltbau GmbH manufactures in compliance with RoHS.

IRIS Certification

The production facilities of Schaltbau GmbH have been IRIS certified since 2008.

Schaltbau GmbH ISO 14001 certified since 2002

Certified to DIN EN ISO 14001 since 2002. For the most recent certificate visit our website.

Schaltbau GmbH ISO 9001 certified since 1994

Certified to DIN EN ISO 9001 since 1994. For the most recent certificate visit our website.

Electrical Components and Systems for Railway Engineering and Industrial Applications

Connectors

- Connectors manufactured to industry standards
- Connectors to suit the special requirements of communications engineering (MIL connectors)
- Charging connectors for battery-powered machines and systems
- Connectors for railway engineering, including UIC connectors
- Special connectors to suit customer requirements

Snap-action switches

- Snap-action switches with positive opening operation
- Snap-action switches with self-cleaning contacts
- Enabling switches
- Special switches to suit customer requirements

Contactors

- Single and multi-pole DC contactors
- High-voltage AC/DC contactors
- Contactors for battery powered vehicles and power supplies
- Contactors for railway applications
- Terminal bolts and fuse holders
- DC emergency disconnect switches
- Special contactors to suit customer requirements

Electrics for rolling stock

- Equipment for driver's cab
- Equipment for passenger use
- High-voltage switchgear
- High-voltage heaters
- High-voltage roof equipment
- Equipment for electric brakes
- Design and engineering of train electrics to customer requirements

Printed in Germany